www.americanfan.com
Bulletin AS0953

Howden

Backwardly Inclined Blowers

Single Width Single Inlet 12¼" through 66" Diameter

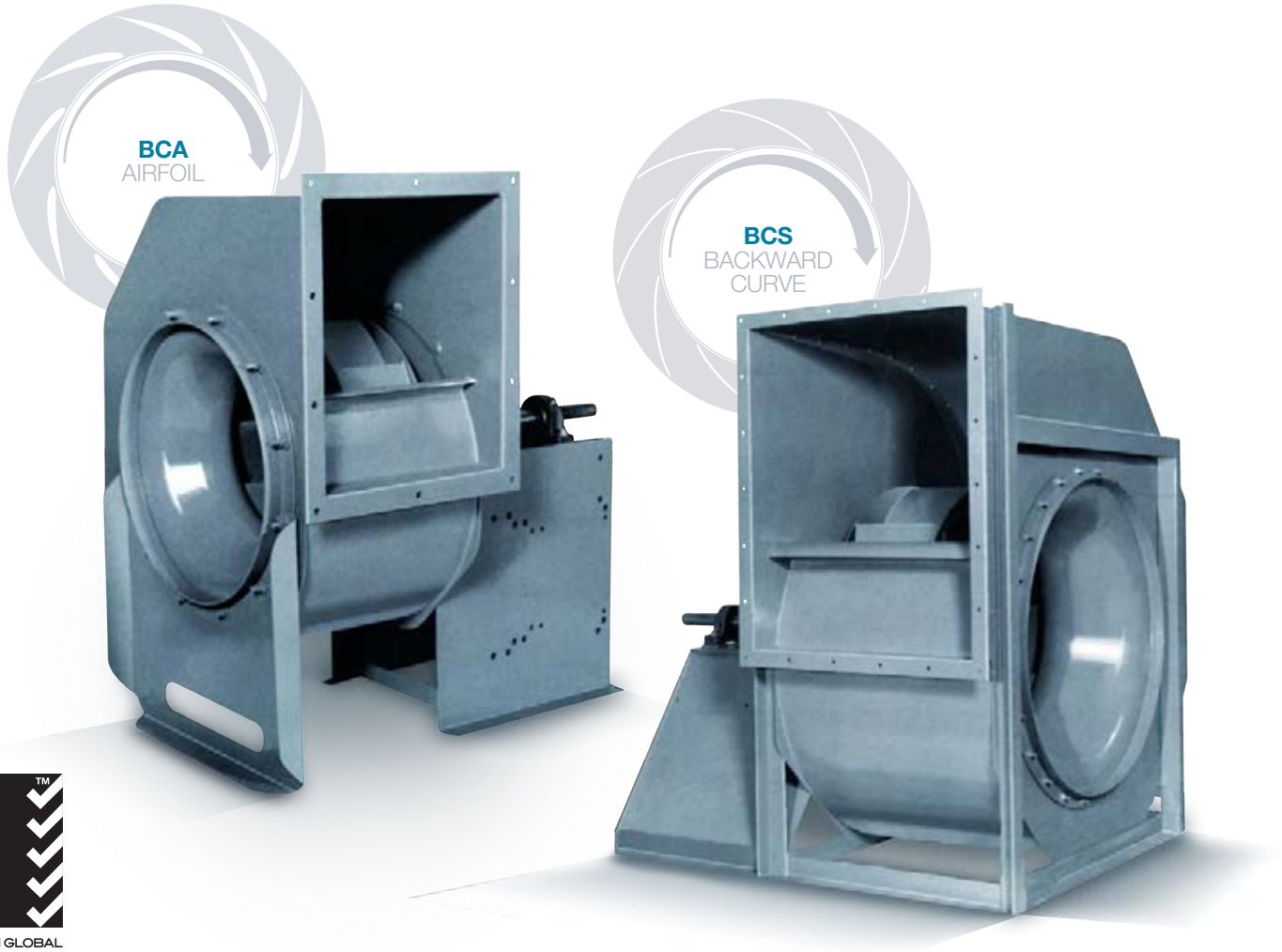

Certified System™
SAI GLOBAL
ISO 9001
Quality

Howden Industrial Fan Group
American Fan / Joy Fan / Garden City Fan

Revolving Around You™

Wheel Types

BCA Airfoil Wheel

High efficiency backwardly inclined airfoil bladed wheel designed for clean, dry air applications. BCA wheels exhibit non-overloading horsepower characteristics and stable performance over the entire pressure curve. Noise levels are lowest in the peak efficiency range of the performance curve. Class 3 wheels utilize internal blade stiffeners for higher tip speed capability.

BCS Backward Curve Wheel

High efficiency backward curved wheel has blade shape similar to the convex shape of the BCA airfoil wheel. This shape provides nearly identical performance characteristics at a given speed at a slightly lower efficiency. BCS wheels also exhibit the same non-overloading horsepower characteristics and stable performance over the entire pressure curve. BCS wheels should be specified in moist or lightly contaminated air systems. Noise levels are lowest in the peak efficiency range of the performance curve. Class 3 wheels utilize a circumferential blade stiffener for higher tip speed capability.

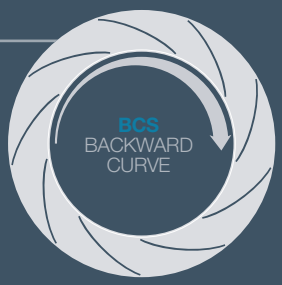

CONTENTS

Accessories 3
AMCA Seal 2
Applications 3
Arrangements 4
Arr't 3 Losses 7
Bearings 2
Capacity Tables, Curves, and
Sound Data 8–71
Construction Materials 5
Conversion Factors 6
Dimensional Data 72–95
Discharge Positions 4
Features 3
High-Temperature Construction 6
Major Industries 3
Selecting Fans 7
Special Construction / Materials 5
Temperature and Altitude Corrections . . 6
Wheel Types 2
Wheel Weights and WR^2 5

This document is for informational purposes only and should not be considered as a binding description of the products or their performance in all applications. The performance data within this catalog depicts typical performance of standard product under controlled laboratory conditions. Actual performance will vary depending on the operating environment and application. Howden reserves the right to revise its products without notification. Howden is not responsible for products driven beyond factory specified speed, voltage, temperature, pressure, flow or without proper electrical grounding.

For product designed to meet specific applications, contact Howden Industrial Fans Sales department.

Bearings

200 Series

Normal duty ball bearings used on class 1 and 2 on sizes 122 through 445. Eccentric cam locking collars hold the bearings securely to the shaft and further tightens with bearing rotation. Bearings are grease relubricable with steelclad lip seals. Sizes 2-7/16" diameter and larger feature spring locking collars.

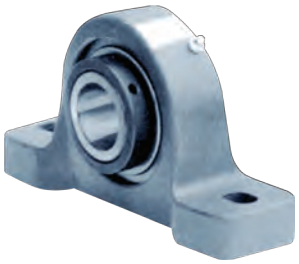

300 Series

Heavy duty ball bearings used on class 3 on sizes 122 through 330. The spring locking collar design provides a secure grip of the wide inner ring bearing to the shaft. Bearings are grease relubricable with felt contact seals.

22400 Series

Heavy duty double row spherical roller bearings used on class 1 and 2 on sizes 490 through 660 and on class 3 on sizes 365 through 660. The spring locking collar design provides a secure grip of the wide inner ring bearing to the shaft. Bearings are grease relubricable with floating labyrinth seals which feature multiple self-centering rings held securely in a steel carrier.

Ratings

American Fan Company certifies that the models BCA, BCS, QBCA, and QBCS shown herein are licensed to bear the AMCA seal. The ratings shown are based on tests and procedures performed in accordance with AMCA Publication 211 and AMCA Publication 311 and comply with the requirements of the AMCA Certified Ratings Program.

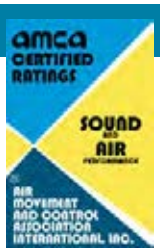

Features

Choice of two wheel types:
Backward Curve (BCS) 12¼" diameter through 66" diameter
Airfoil (BCA) 18¼" diameter through 66" diameter

Drilled outlet flange and slip collar inlet-standard

Pressures to 17" SP wg, Volumes to 100,000 CFM

Arrangement 1 bases prepunched for motor slide bases

Fork lift slots and lifting eyes in base for ease of handling and installation up through size 330

Available in standard or "Q" design

Heavy gage continuously welded housings, reversible and rotatable through size 330, fixed on sizes 365 and up

Heavy duty anti-friction, self-aligning ball or roller bearings with positive shaft locking

Close tolerance 1141 turned, ground, and polished shafting

Two-plane dynamically balanced wheels

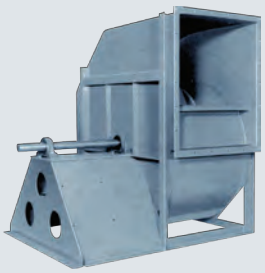

Accessories

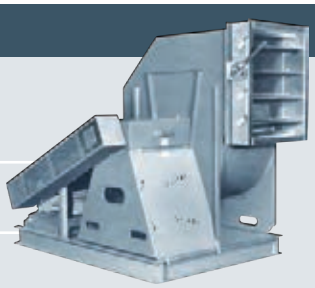

Drive Guard

Standard guard is a totally enclosed design, as required by OSHA, for industrial applications.

Outlet Damper

Heavy-duty damper bolts onto blower outlet flange for controlled air flow. Parallel or opposed blade designs are furnished. Either manual or motorized operator is available.

Arrangement 1 Unitary

American Fan Co. offers unitary bases constructed of heavy channel iron for high horse power or high temperature applications where Arrangement 9 is impractical. The unitary base design is a complete packaged unit simplifying handling and installation while providing a more uniform weight distribution necessary when vibration isolators are used. Unitary bases also allow excellent access for routine maintenance.

Access Door

Heavy-duty bolt-on type provided as the standard design. Quick release and other types including extended access for high temperature insulated housing applications are available.

Additional Available Accessories

- Housing drain
- Inlet screen
- Outlet screen
- High-temperature construction up to 1000° F
- Stuffing box
- Mechanical shaft seal
- Spark resistant construction
- Stainless steel, aluminum, or other alloy airstream
- Radial inlet vane damper
- Flexible coupling for Arrangement 8
- Special coatings
- Flanged inlet
- Slip connection discharge
- Flexible connectors
- Companion flanges
- Weather cover
- Vibration isolators
- Shaft seal

Typical Applications

- Air pollution control systems
- Dryers and ovens
- HVAC
- Forced draft
- Boiler windbox
- Make-up air
- Fume control
- Air curtains
- Electronics cooling

Major Industries

- Energy
- Pulp and Paper
- Commercial building
- Automotive
- Textile
- Petrochemical
- Steel

Arrangements *ALSO AVAILABLE IN “Q” DESIGN. SEE PAGES 82–91.

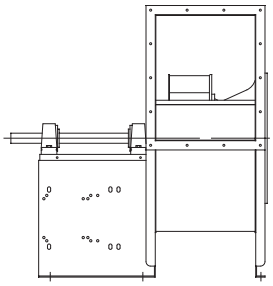

Arrangement 1*

The fan wheel is overhung with both bearings mounted on a common pedestal. Arrangement 1 is suitable for high temperature and/or corrosive environment. Fan can be belt driven or directly coupled to drive motor mounted on a separate base.

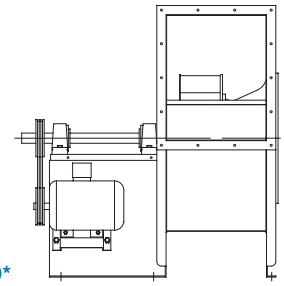

Arrangement 9*

The fan wheel is overhung with both bearings mounted on a common pedestal. Fan is belt driven with drive motor mounted on bearing pedestal for a more compact unit suitable for high temperature and/or corrosive environment.

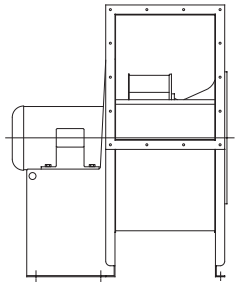

Arrangement 4*

Direct drive fan with wheel mounted directly on motor shaft. Unit is designed for standard temperature applications only. With no belt loss, the direct drive fan operates at a higher efficiency.

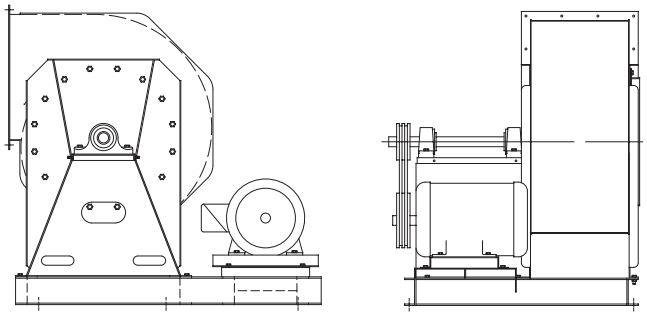

Arrangement 1 Unitary

Arrangement 1 fan is mounted on a common channel iron base with motor and slide base. Commonly used when motor frame size exceeds arrangement 9 limitations and for high temperature applications. Also ideal for use with vibration isolators.

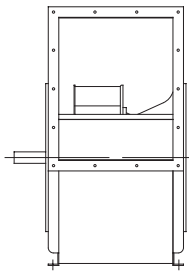

Arrangement 3*

Belt drive or direct drive through coupling. Wheel is center hung with one bearing on each side supported by fan housing. Performance is slightly derated due to bearing in airstream. Designed for clean, dry, normal temperature applications only.

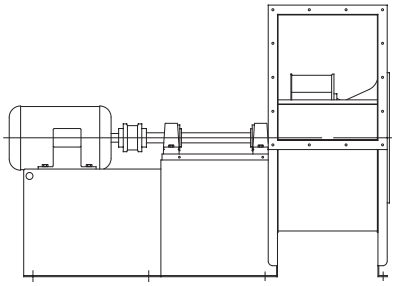

Arrangement 8

Direct drive fan through shaft and bearings. Efficiency of Arrangement 4 is maintained. However, Arrangement 8 may be used for high temperature and/or corrosive applications which require the motor shaft to be outside of airstream.

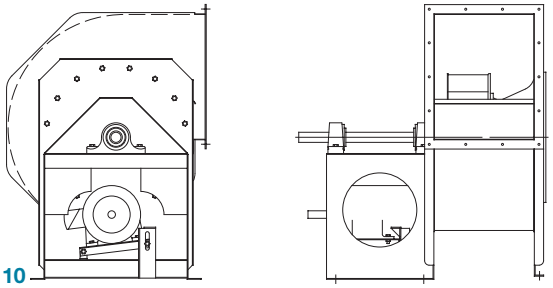

Arrangement 10

The fan wheel is overhung with both bearings mounted on a common pedestal. Fan is belt driven with drive motor mounted inside the bearing pedestal. Unit is compact and is commonly provided with an optional weather cover which encloses the shaft, bearings, drives and motor.

Discharge Positions

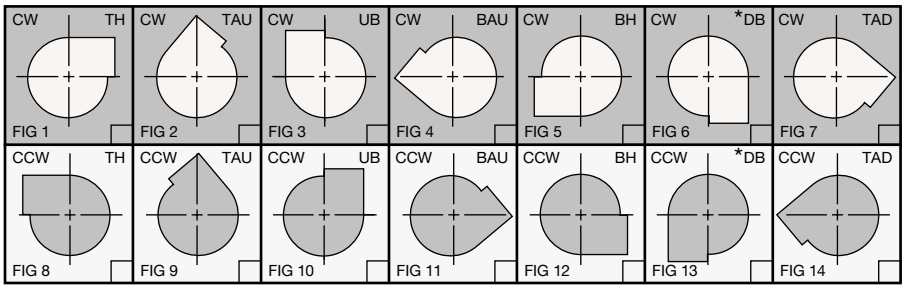

*Downblast discharge on sizes 122 through 330 can either be suppled without outlet flange or with flange and discharge extended to 2" below mounting surface of base. There is an additional charge for extending discharge. Sizes 365 through 660 are supplied with integral flush outlet flange.

NOTE: Rotation viewed from driven side.

Construction Materials

						CLASS 1 & 2							CLASS 3								
FAN SIZE	CHANNEL SIDE	CHANNEL TOP	MBFP/ INL. PLT	INLET VENTURI	WHEEL SPINNING	HSG. SIDE	HSG. SCROLL	BCS BLADE	BCA BLADE	WHL. BKPLT.	SHAFT DIA.	BEARINGS	HSG. SIDE	HSG. SCROLL	BCS BLADE	BCS BLADE REIN.	BCA BLADE	BCA BLADE REIN.	WHL. BKPLT.	SHAFT DIA.	BEARINGS
122	12	12	12	14	14	12	14	14	–	12	1 3/16	P3-Y219N	10	12	12	14	–	–	10	1 7/16	P-323
135	12	12	12	14	14	12	14	14	–	12	1 3/16	P3-Y219N	10	12	12	14	–	–	10	1 7/16	P-323
150	12	12	12	14	14	12	14	14	–	12	1 3/16	P3-Y219N	10	12	12	14	–	–	10	1 7/16	P-323
165	10	10	10	14	12	12	12	14	–	12	1 7/16	P3-Y223N	10	10	12	12	–	–	10	1 11/16	P-327
182	10	10	10	12	12	12	12	12	18	12	1 7/16	P3-Y223N	10	10	10	12	18	16	10	1 11/16	P-327
200	10	10	10	12	12	12	12	12	18	12	1 7/16	P3-Y223N	10	10	10	12	18	16	10	1 15/16	P-331
222	7	7	10	12	12	10	12	12	18	10	1 11/16	P3-Y227N	10	10	10	12	18	16	7	1 15/16	P-331
245	7	7	10	12	10	10	12	10	16	10	1 11/16	P3-Y227N	10	10	7	10	16	14	7	2 3/16	P-335
270	¼	¼	7	12	10	10	12	10	16	10	1 11/16	P3-Y227N	10	10	7	10	16	14	7	2 3/16	P-335
300	¼	¼	7	12	10	10	12	10	16	7	1 15/16	P3-Y231N	10	10	7	10	16	14	¼	2 7/16	P-339
330	¼	¼	7	12	7	10	12	10	16	7	2 3/16	P3-Y235N	7	7	7	7	16	12	¼	2 11/16	P-343
365	3/8	3/8	–	12	7	10	10	10	16	7	2 7/16	P3-Y239N	7	7	7	7	16	12	¼	2 11/16	P-B22443H
402	3/8	3/8	–	12	7	10	10	10	16	7	2 11/16	P-243	7	7	7	7	16	12	¼	2 15/16	P-B22447H
445	3/8	3/8	–	12	7	10	10	10	16	7	2 11/16	P-243	7	7	7	7	16	12	¼	2 15/16	P-B22447H
490	3/8	3/8	–	10	¼	10	10	7	14	¼	2 15/16	P-B22447H	7	7	¼	¼	14	12	5/16	3 7/16	P-B22455H
542	3/8	3/8	–	10	¼	10	10	7	14	¼	3 3/16	P-B22451H	7	7	¼	¼	14	12	5/16	3 11/16	P-B22459H
600	3/8	½	–	10	¼	10	10	7	14	¼	3 7/16	P-B22455H	7	7	¼	¼	14	10	5/16	4 7/16	P-B22571H
660	3/8	½	–	10	¼	10	10	7	14	¼	3 15/16	P-B22463H	7	7	¼	¼	14	10	5/16	4 7/16	P-B22571H

NOTE: Bearings are Link-Belt or equivalent.

Wheel Weights and WR²

BCA AIRFOIL WHEELS

		CLASS 1 & 2		CLASS 3	
SIZE	DIA. (INCHES)	WEIGHT (LBS)	WR² (-FT²)	WEIGHT (LBS)	WR² (LBS-FT²)
182	18¼	32	9.6	34	10.2
200	20	36	13.0	39	14.0
222	22¼	51	22.7	57	25.4
245	24½	64	34.6	71	38.4
270	27	74	48.6	83	54.5
300	30	110	89.1	124	100
330	33	135	132	154	151
365	36½	159	191	183	219
402	40¼	223	325	251	366
445	44½	258	460	294	524
490	49	407	882	445	962
542	54¼	419	1110	532	1409
600	60	615	1993	681	2206
660	66	715	2803	797	3125

$$\left(\frac{\text{Equivalent WR}^2}{\text{At Motor Shaft}}\right) = \text{WR}^2 \left(\frac{\text{Fan RPM}}{\text{Motor RPM}}\right)^2 \times 1.05$$

BCS BACKWARD CURVE WHEELS

		CLASS 1 & 2		CLASS 3	
SIZE	DIA. (INCHES)	WEIGHT (LBS)	WR² (LBS-FT²)	WEIGHT (LBS)	WR² (LBS-FT²)
122	12¼	13	1.8	16	2.2
135	13½	15	2.5	19	3.1
150	15	17	3.4	22	4.5
165	16½	27	6.6	33	8.1
182	18¼	34	10.2	41	12.3
200	20	38	13.7	46	16.6
222	22¼	54	24.1	67	29.9
245	24½	68	36.7	87	47.0
270	27	80	52.5	102	66.9
300	30	116	94.0	147	119
330	33	143	140	183	179
365	36½	168	201	218	261
402	40¼	233	340	291	424
445	44½	271	483	342	610
490	49	434	938	539	1165
542	54¼	514	1361	644	1706
600	60	647	2096	807	2615
660	66	754	2956	949	3720

Special Construction / Materials

Spark Resistant Construction

Type A

All parts of the fan in contact with the air or gas being handled shall be made of non-ferrous material.*

Type B

Fan shall have entirely non-ferrous wheel and a non-ferrous ring about the opening through which the shaft passes.

Type C

Fan shall be so constructed that a shift of the wheel or shaft will not permit two ferrous parts of the fan to rub or strike.

*American Fan Co. offers a Type "A" alternate Type "AA" spark-resistant construction which has a non-ferrous airstream except shaft, which is 316 S.S.

Corrosion Resistant & Special Alloys

For applications involving handling of corrosive fumes, a wide variety of protective coatings and special alloy metals are available. Consult your Americavn Fan representative or factory for full details.

Temperature & Altitude Corrections

Using Density Correction Factors

The capacity tables in this bulletin are based on fans handling standard air at a density of .075 pounds per cubic foot equivalent to air at 70°F and 29.92" Hg barometric pressure. Therefore, when a fan handles air or other gases at other than standard density due to temperature, altitude or the types of gas, the published tables should be used in the following manner.

Example

Determine RPM and BHP for a BCS-122, 2058 CFM, 7" SP, 300° F, 3000 feet elevation.

1. Determine the equivalent static pressure in the following manner: SP = required SP x density factor for conditions from the table below, ie., equivalent SP = 7 x 1.61 = 11.27".
2. Using the required CFM and the equivalent SP, obtain the RPM and BHP from the capacity table, interpolating when necessary. From capacity table for size BCS-122, RPM = 4804, Equivalent BHP = 5.74.
3. The RPM obtained is the correct value.
4. The BHP obtained must be corrected for the actual density as follows:

$$\text{BHP at conditions} = \frac{\text{Equivalent BHP}}{\text{Density Factor}}$$

$$= \frac{5.74}{1.64}$$

Therefore, BHP at conditions = 3.57

DERATING FACTORS FOR HI-TEMPERATURE

TEMP. °F	DERATING FACTOR STD. STEEL	304 STAINLESS	316 STAINLESS
70°	1.0	.91	.91
200°	.98	.84	.88
300°	.96	.79	.81
400°	.95	.75	.79
500°	.90	.72	.78
600°	.86	.70	.76
700°	.82	.68	.74
800°	N/A	.67	.72
900°	N/A	N/A	Contact
1000°	N/A	N/A	Factory

When elevated temperatures are encountered maximum RPMs shown on performance tables must be derated according to the above table. Standard steel construction is not suitable for use in temperatures over 700°F. Aluminum wheels are suitable for use up to 250°F only.

AIR TEMP. DEG. F.	ALTITUDE IN FEET ABOVE SEA LEVEL 0	500	1000	1500	2000	2500	3000	3500	4000	4500	5000	5500	6000	6500	7000	7500	8000	8500	9000	10000
–60°	.76	.77	.78	.80	.81	.83	.84	.86	.87	.89	.91	.92	.94	.96	.98	1.00	1.02	1.04	1.06	1.10
–40°	.79	.81	.82	.84	.85	.87	.88	.90	.92	.93	.95	.97	.99	1.01	1.03	1.05	1.07	1.09	1.11	1.15
–20°	.83	.85	.86	.88	.89	.91	.93	.94	.96	.98	1.00	1.02	1.04	1.06	1.08	1.10	1.12	1.14	1.16	1.21
0°	.87	.89	.91	.92	.94	.96	.98	.99	1.01	1.03	1.05	1.06	1.09	1.10	1.13	1.15	1.17	1.19	1.22	1.26
40°	.94	.96	.98	1.00	1.02	1.04	1.06	1.08	1.10	1.12	1.14	1.16	1.19	1.21	1.23	1.26	1.28	1.30	1.32	1.36
70°	1.00	1.02	1.04	1.06	1.08	1.10	1.12	1.14	1.16	1.18	1.20	1.22	1.25	1.27	1.30	1.32	1.35	1.37	1.40	1.45
80°	1.02	1.04	1.06	1.08	1.10	1.12	1.14	1.16	1.19	1.21	1.23	1.26	1.28	1.30	1.33	1.36	1.38	1.41	1.43	1.48
100°	1.06	1.08	1.10	1.12	1.14	1.16	1.19	1.21	1.23	1.25	1.28	1.30	1.33	1.35	1.38	1.41	1.43	1.46	1.48	1.54
120°	1.09	1.12	1.14	1.16	1.18	1.20	1.23	1.25	1.28	1.30	1.32	1.35	1.38	1.40	1.43	1.46	1.48	1.51	1.53	1.58
140°	1.13	1.15	1.18	1.20	1.22	1.25	1.27	1.29	1.32	1.34	1.37	1.40	1.42	1.45	1.48	1.51	1.54	1.57	1.58	1.65
160°	1.17	1.19	1.22	1.24	1.26	1.29	1.31	1.34	1.36	1.39	1.42	1.44	1.47	1.50	1.53	1.56	1.59	1.62	1.64	1.70
180°	1.21	1.23	1.26	1.28	1.30	1.33	1.36	1.38	1.41	1.43	1.46	1.49	1.52	1.55	1.58	1.61	1.64	1.67	1.70	1.75
200°	1.25	1.27	1.29	1.32	1.34	1.37	1.40	1.42	1.45	1.48	1.51	1.54	1.57	1.60	1.63	1.66	1.69	1.72	1.75	1.81
250°	1.34	1.36	1.39	1.42	1.45	1.47	1.50	1.53	1.56	1.59	1.62	1.65	1.68	1.71	1.74	1.78	1.82	1.85	1.88	1.94
300°	1.43	1.46	1.49	1.52	1.55	1.58	1.61	1.64	1.67	1.70	1.74	1.77	1.80	1.84	1.87	1.91	1.94	1.98	2.00	2.08
350°	1.53	1.56	1.59	1.62	1.65	1.68	1.72	1.75	1.78	1.81	1.85	1.88	1.92	1.96	2.00	2.04	2.07	2.11	2.14	2.22
400°	1.62	1.65	1.69	1.72	1.75	1.79	1.82	1.85	1.89	1.93	1.96	2.00	2.04	2.08	2.12	2.16	2.20	2.25	2.27	2.35
450°	1.72	1.75	1.79	1.82	1.86	1.89	1.93	1.96	2.00	2.04	2.08	2.12	2.16	2.20	2.24	2.29	2.33	2.38	2.41	2.50
500°	1.81	1.85	1.88	1.92	1.96	1.99	2.03	2.07	2.11	2.15	2.19	2.23	2.28	2.32	2.36	2.41	2.46	2.51	2.54	2.62
550°	1.91	1.94	1.98	2.02	2.06	2.10	2.14	2.18	2.22	2.26	2.30	2.35	2.40	2.44	2.49	2.54	2.58	2.63	2.68	2.77
600°	2.00	2.04	2.08	2.12	2.16	2.20	2.24	2.29	2.33	2.38	2.42	2.47	2.50	2.56	2.61	2.66	2.71	2.77	2.80	2.90
650°	2.10	2.14	2.18	2.22	2.26	2.31	2.35	2.40	2.44	2.49	2.54	2.58	2.63	2.68	2.74	2.79	2.84	2.90	2.94	3.04
700°	2.19	2.23	2.27	2.32	2.36	2.41	2.46	2.50	2.55	2.60	2.65	2.70	2.75	2.80	2.86	2.91	2.97	3.03	3.06	3.18
750°	2.28	2.33	2.37	2.42	2.47	2.51	2.56	2.61	2.66	2.71	2.76	2.81	2.87	2.92	2.98	3.04	3.10	3.16	3.19	3.31
800°	2.38	2.43	2.48	2.52	2.57	2.62	2.66	2.72	2.76	2.81	2.86	2.90	2.98	3.02	3.10	3.14	3.21	3.26	3.33	3.45
850°	2.47	2.52	2.57	2.62	2.67	2.72	2.76	2.82	2.87	2.92	2.97	3.02	3.09	3.14	3.21	3.26	3.33	3.38	3.46	3.58
900°	2.57	2.62	2.67	2.72	2.76	2.83	2.88	2.93	2.98	3.03	3.08	3.14	3.21	3.26	3.34	3.39	3.47	3.52	3.60	3.73
950°	2.66	2.72	2.77	2.82	2.87	2.92	2.98	3.03	3.08	3.14	3.19	3.24	3.32	3.38	3.46	3.51	3.58	3.64	3.72	3.86
1000°	2.76	2.82	2.87	2.92	2.98	3.04	3.09	3.14	3.20	3.26	3.31	3.37	3.45	3.50	3.59	3.64	3.72	3.78	3.86	4.00

High Temperature Construction

250°F–400°F: Heat Slinger, high-temperature paint.

401°F–700°F: Heat Slinger, high-temperature shaft seal, high-temperature paint, Arrangement 1 or 8 only.

701°F–900°F: Heat Slinger, high-temperature shaft seal, heat shield, special wheel construction including fins, Arrangement 1 or 8 only, fixed and floating bearings, hightemperature paint.

901°F–1000°: Heat Slinger, high-temperature shaft seal, heat shield, 316 S.S. wheel with fins, 316 S.S. shaft, fixed and floating oil lubricated bearings, Arrangement 1 or 8 only, high-temperature paint on non S.S. parts.

Conversion Factors

Volume: cubic meters/sec. x 2119 = cubic feet/min. (CFM)

Pressure: Pascals (N/m^2) x 0.004 = inches water

Power: kilowatts (Kw) x 1.341 = horsepower

Length: centimeters (cm) x 0.3937 = inches

Temperature: (°C x 1.8) + 32 = °F

Selecting Fans

The following 56 pages contain air and sound performance data on backward curve (BCS) blowers, 12¼" through 66" diameter, and airfoil (BCA) blowers, 18¼" through 66" diameter. An IBM compatable PC computer program is also available from your local American Fan sales representative or the factory to aid in selecting any American Fan Company product.

Performance shown is for BCS and BCA blowers with outlet duct and with or without inlet duct.

The sound power level ratings shown are in decibels, referred to 10^{-12} watts calculated per AMCA Standard 301. Values shown are for inlet L_{wi} sound power levels for installation Type B, free inlet, ducted outlet. Ratings do not include the effects of duct end correction .

			6.00" SP	
	CFM	OV	RPM	BHP
▶	**1564**	1900	3546	2.31
▶	**1646**	2000	3599	2.43
	1729	2100	3653	2.55
	1811	2200	3710	2.68
	1894	2300	3776	2.81

BCS-122 SINGLE WIDTH

CONSTANT SPEED PERFORMANCE CURVES

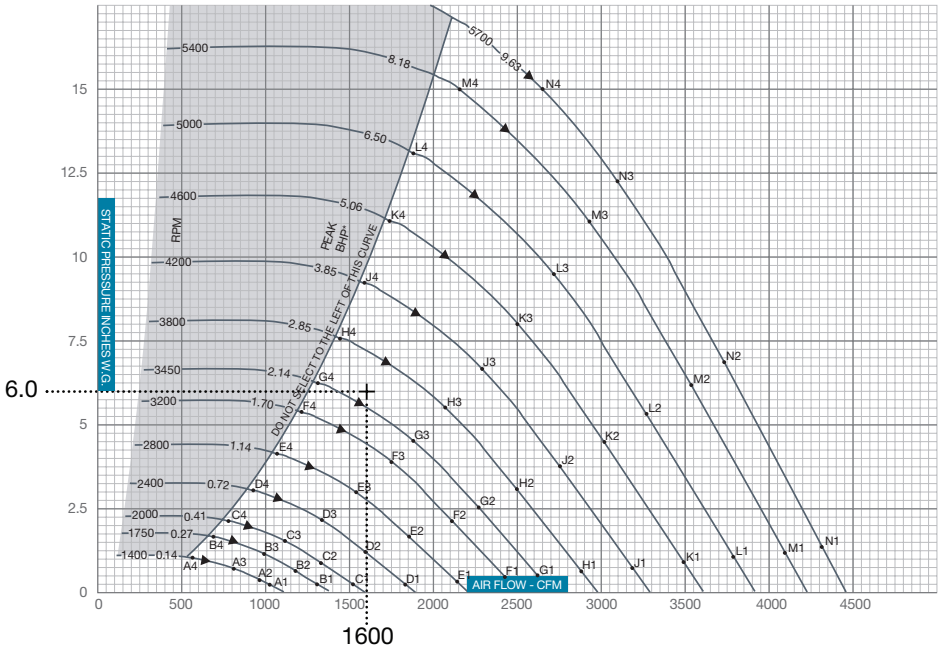

EXAMPLE:

1. A fan is required to deliver 1600 CFM at 6.0" SP at .075 lbs./cu. ft. density.
2. Referring to the BCS capacity tables on pages 8 and 10, we see that a BCS-122 selection is closer to the underlined peak efficiency rating and is therefore more efficient than a BCS-135.
3. Interpolating on the BCS-122 table the required speed is 3569 RPM, the brakehorsepower is 2.36, and the Class is 1.
4. To determine the outlet velocity, divide the CFM by the outlet area.

$$\frac{1600 \text{ CFM}}{.825 \text{ sq. ft.}} = 1942 \text{ ft./min. outlet velocity}$$

5. Referring to the constant speed curves on page 9, interpolate between the 3450 and 3800 RPM curve for 3569 RPM. We can see we are near peak efficiency at the selection point. Knowing our BHP is 2.36 we can compare the maximum (or peak) BHP using the formula as shown at the top of page 8.

$$\text{BCS-122 Max BHP} = .052 \times \left(\frac{3569 \text{ RPM}}{1000}\right)^3$$

$$= 2.36 \text{ Max. BHP}$$

In this example, the selection BHP and the peak BHP are the same, 2.36, so a 3 HP motor is selected.

6. The fan static efficiency (%) can now be calculated using the formula on page 9.

$$\% \text{ Static Efficiency} = \frac{1600 \text{ CFM} \times 6.0\text{" SP} \times .0157}{2.36 \text{ BHP}}$$

$$= 63.9\%$$

7. To determine sound levels, locate selection point on constant speed performance curves and determine which sound point the selection point is nearest. It may be necessary to interpolate if selection point is approximately equidistant between sound points. In the example, we must average the sound levels of sound points G3, G4, H3 and H4.

FAN RPM	FAN SP	SOUND POINT	*BAND* / FREQUENCY 1 / 63	2 / 125	3 / 250	4 / 500	5 / 1000	6 / 2000	7 / 4000	8 / 8000
3450	4.50	G3	89	91	90	88	82	78	77	72
	6.50	G4	89	97	93	92	85	80	78	74
3800	5.46	H3	90	93	92	91	85	80	79	75
	7.89	H4	91	99	96	95	88	83	81	77
Average of sound points-			90	95	93	92	85	80	79	75

8. Results: BCS-122, arrangement 9, Class 1
   1600 CFM
   1942 ft. / min. OV
   6" SP
   3569 RPM
   2.36 BHP
   63.9% Static Efficiency

		Sound Power Levels				*Band* / Frequency (HZ)			
FAN RPM	FAN SP	1 / 63	2 / 125	3 / 250	4 / 500	5 / 1000	6 / 2000	7 / 4000	8 / 8000
3569	6.0	90	95	93	92	85	80	79	75

Aerodynamic Losses of Arrangement 3 SWSI Fans

Performances shown in this catalog are based on Arrangement 1 test fans with unobstructed inlets. Arrangement 3 SWSI fans have a bearing and supports in the inlet which cause a slight reduction in fan performance. In order to compensate for this reduction, the following formula must be applied. The resultant static pressure loss should be added to your system static pressure when making a fan selection.

$SL = CF \times SF \times (OV/4005)^2$ where:

SL = Static Pressure Loss
CF = Class Factor
O = Outlet Velocity (from capacity tables)
SF = Size Factor

Note: The AMCA Certified Ratings Seal does not apply when factors are used.

CLASS FACTORS	
CLASS	FACTOR
1 & 2	0.68
3	0.90

SIZE FACTORS	
FAN SIZE	SIZE FACTOR
122	1.00
135	0.97
150	0.93
165	0.91
182	0.88
200	0.85
222	0.82
245	0.79
270	0.77

SIZE FACTORS	
FAN SIZE	SIZE FACTOR
300	0.74
330	0.72
365	0.69
402	0.67
445	0.65
490	0.63
542	0.61
600	0.59
660	0.57

EXAMPLE: Select a BCS-200 Arr't 3 SWSI fan for 6370 CFM at 6"SP.

From capacity table, BCS-200 OV at 6370 CFM is 2900 ft./min. Fan is class 2. Using static pressure loss formula:

$SL = 0.68 \times 0.85 \times (2900/4005)^2$
SL = 0.30"
6" SP + 0.3" SL = 6.3" SP

Therefore, fan should be selected for 6370 CFM at 6.3" SP.

BCS-122 SINGLE WIDTH

WHEEL DIAMETER: 12.25"
WHEEL CIRCUMFERENCE: 3.21'
OUTLET AREA: 0.824 SQ. FT.
OUTLET SIZE: 9¾" X 12³⁄₁₆"
INLET DIAMETER: 13⅜" O.D.

MAX SPEEDS	CLASS 1	CLASS 2	CLASS 3
Up to 250°F	3952	5155	5700
251°F to 400°F*	3754	4897	5415
401°F to 700°F*	3241	4227	4674
Above 700°F	CONTACT FACTORY		

*Special hi-temp construction required
Tip Speed (fpm) = 3.21 x RPM
Max BHP = 0.052 x $(RPM/1000)^3$

		0.25" SP		0.50" SP		0.75" SP		1.00" SP		1.50" SP		2.00" SP		2.50" SP		3.00" SP		3.50" SP	
CFM	OV	RPM	BHP	RPM	BHP	RPM	BHP	RPM	BHP	RPM	BHP	RPM	BHP	RPM	BHP	RPM	BHP	RPM	BHP
576	700	946	0.04	1114	0.07	1269	0.11	1409	0.14										
658	800	1033	0.05	1182	0.08	1326	0.12	1461	0.16	1704	0.25								
741	900	1123	0.06	1262	0.10	1393	0.14	1516	0.18	1747	0.28	1959	0.38						
823	1000	1215	0.08	1346	0.12	1462	0.16	1582	0.21	1800	0.30	1996	0.41	2188	0.53				
905	1100	1309	0.10	1432	0.14	1544	0.18	1650	0.23	1855	0.33	2049	0.45	2225	0.57	2398	0.69		
988	1200	1405	0.12	1522	0.16	1628	0.21	1725	0.26	1921	0.37	2102	0.49	2275	0.61	2436	0.74	2595	0.88
1070	1300	1501	0.14	1613	0.19	1713	0.24	1808	0.29	1988	0.41	2162	0.53	2328	0.66	2484	0.79	2632	0.94
1152	1400	1599	0.17	1705	0.22	1801	0.27	1892	0.33	2057	0.45	2228	0.57	2382	0.71	2537	0.85	2681	1.00
1235	1500	1697	0.20	1799	0.25	1891	0.31	1977	0.37	2138	0.49	2295	0.62	2447	0.76	2591	0.91	2734	1.06
1317	1600	1796	0.23	1894	0.29	1983	0.35	2065	0.41	2220	0.54	2364	0.68	2514	0.82	2653	0.98	2788	1.13
1399	1700	1896	0.27	1989	0.33	2075	0.40	2155	0.46	2304	0.59	2442	0.74	2582	0.89	2719	1.04	2847	1.21
1482	1800	1996	0.32	2086	0.38	2168	0.45	2246	0.51	2390	0.65	2524	0.80	2651	0.95	2786	1.12	2913	1.29
1564	1900	2097	0.36	2183	0.43	2263	0.50	2338	0.57	2476	0.72	2608	0.87	2730	1.03	2854	1.20	2979	1.37
1646	2000	2198	0.42	2281	0.49	2358	0.56	2430	0.63	2565	0.79	2692	0.94	2812	1.11	2924	1.28	3047	1.46
1729	2100	2300	0.48	2379	0.55	2453	0.62	2524	0.70	2655	0.86	2778	1.02	2895	1.19	3006	1.37	3116	1.55

		4.00" SP		4.50" SP		5.00" SP		5.50" SP		6.00" SP		6.50" SP		7.00" SP		7.50" SP		8.00" SP	
CFM	OV	RPM	BHP	RPM	BHP	RPM	BHP	RPM	BHP	RPM	BHP	RPM	BHP	RPM	BHP	RPM	BHP	RPM	BHP
1152	1400	2818	1.15	2957	1.31	3089	1.48												
1235	1500	2868	1.22	2995	1.38	3126	1.56	3251	1.73										
1317	1600	2921	1.30	3047	1.46	3166	1.64	3289	1.82	3408	2.01	3523	2.20						
1399	1700	2975	1.38	3100	1.55	3219	1.73	3332	1.91	3446	2.10	3560	2.30	3671	2.50	3777	2.70		
1482	1800	3032	1.46	3154	1.64	3272	1.82	3385	2.01	3493	2.20	3598	2.40	3708	2.60	3815	2.81	3918	3.03
1564	1900	3098	1.55	3210	1.73	3326	1.92	3438	2.12	3546	2.31	3650	2.51	3750	2.72	3852	2.93	3955	3.15
1646	2000	3164	1.64	3275	1.83	3381	2.03	3492	2.23	3599	2.43	3703	2.64	3803	2.85	3899	3.06	3993	3.28
1729	2100	3232	1.74	3342	1.94	3447	2.14	3548	2.34	3653	2.55	3756	2.76	3856	2.98	3952	3.20	4045	3.42
1811	2200	3300	1.85	3409	2.05	3513	2.25	3614	2.46	3710	2.68	3810	2.90	3909	3.12	4005	3.34	4098	3.57
1894	2300	3369	1.96	3477	2.16	3581	2.38	3680	2.59	3776	2.81	3868	3.03	3963	3.26	4058	3.49	4151	3.72
1976	2400	3450	2.08	3546	2.29	3649	2.50	3747	2.72	3842	2.95	3934	3.18	4023	3.41	4113	3.65	4205	3.89
2058	2500	3532	2.20	3622	2.42	3717	2.64	3815	2.86	3909	3.09	4000	3.33	4089	3.57	4174	3.81	4259	4.05
2141	2600	3615	2.34	3704	2.56	3790	2.78	3883	3.01	3977	3.24	4067	3.48	4155	3.73	4240	3.98	4323	4.23
2223	2700	3699	2.48	3787	2.70	3871	2.93	3953	3.16	4045	3.40	4135	3.65	4222	3.90	4307	4.15	4389	4.41
2305	2800	3783	2.68	3870	2.86	3953	3.09	4034	3.33	4114	3.57	4204	3.82	4290	4.07	4374	4.33	4456	4.59
2388	2900	3868	2.78	3954	3.02	4036	3.26	4116	3.50	4194	3.74	4272	4.00	4358	4.26	4442	4.52	4523	4.79
2470	3000	3954	2.94	4038	3.18	4120	3.43	4199	3.68	4275	3.93	4350	4.19	4427	4.45	4510	4.72	4591	4.99
2552	3100	4041	3.12	4124	3.36	4204	3.61	4282	3.87	4358	4.12	4431	4.39	4503	4.65	4579	4.92	4659	5.20
2635	3200	4130	3.30	4210	3.55	4289	3.80	4366	4.06	4441	4.33	4514	4.59	4585	4.86	4654	5.14	4728	5.42
2717	3300	4220	3.48	4297	3.74	4374	4.00	4450	4.27	4524	4.54	4597	4.81	4667	5.09	4736	5.37	4803	5.63

		8.50" SP		9.00" SP		9.50" SP		10.00" SP		11.00" SP		12.00" SP		13.00" SP		14.00" SP		15.00" SP	
CFM	OV	RPM	BHP	RPM	BHP	RPM	BHP	RPM	BHP	RPM	BHP	RPM	BHP	RPM	BHP	RPM	BHP	RPM	BHP
1564	1900	4055	3.38	4152	3.60														
1646	2000	4092	3.51	4189	3.74	4284	3.98	4375	4.22										
1729	2100	4136	3.65	4227	3.88	4321	4.12	4413	4.37	4590	4.87								
1811	2200	4188	3.80	4276	4.04	4362	4.27	4450	4.52	4627	5.03	4796	5.56						
1894	2300	4241	3.96	4329	4.20	4414	4.45	4497	4.69	4665	5.20	4834	5.74	4996	6.29				
1976	2400	4294	4.13	4382	4.37	4467	4.62	4550	4.88	4710	5.39	4871	5.92	5033	6.48	5190	7.05	5340	7.64
2058	2500	4348	4.30	4435	4.55	4520	4.81	4603	5.07	4763	5.59	4916	6.13	5071	6.68	5227	7.27	5378	7.86
2141	2600	4404	4.48	4489	4.74	4574	5.00	4656	5.26	4816	5.80	4969	6.34	5116	6.90	5265	7.48	5415	8.09
2223	2700	4469	4.67	4548	4.93	4628	5.20	4710	5.46	4869	6.01	5022	6.57	5168	7.14	5310	7.72	5453	8.32
2305	2800	4535	4.86	4613	5.13	4689	5.40	4764	5.67	4923	6.23	5075	6.80	5221	7.38	5363	7.97	5499	8.57
2388	2900	4602	5.06	4679	5.33	4755	5.61	4829	5.89	4977	6.46	5129	7.04	5275	7.63	5415	8.24	5552	8.85
2470	3000	4669	5.27	4746	5.55	4821	5.83	4895	6.12	5037	6.70	5183	7.29	5328	7.89	5469	8.51	5605	9.13
2552	3100	4737	5.48	4814	5.77	4888	6.06	4961	6.35	5103	6.94	5239	7.54	5382	8.16	5522	8.78	5658	9.42
2635	3200	4806	5.71	4881	6.00	4956	6.29	5028	6.59	5169	7.19	5305	7.81	5436	8.43	5576	9.07		
2717	3300	4874	5.94	4950	6.23	5024	6.53	5096	6.84	5236	7.45	5371	8.08	5502	8.71	5630	9.36		
2799	3400	4949	6.18	5019	6.48	5092	6.79	5164	7.09	5303	7.72	5438	8.36	5567	9.00	5693	9.66		
2882	3500	5031	6.44	5094	6.74	5161	7.05	5232	7.36	5371	8.00	5505	8.65	5634	9.30				
2964	3600	5113	6.71	5175	7.01	5237	7.32	5301	7.63	5439	8.28	5572	8.94						

Performance shown is for installation type B & D - Free or ducted inlet, Ducted outlet. Underlined ratings indicate maximum static efficiency. Power rating (BHP) does not include drive losses. Performance ratings do not include the effects of appurtenances in the airstream. NOTE: Ratings shown apply also to model QBCS.

CLASS 1 | CLASS 2 | CLASS 3

BCS-122 SINGLE WIDTH

CONSTANT SPEED PERFORMANCE CURVES

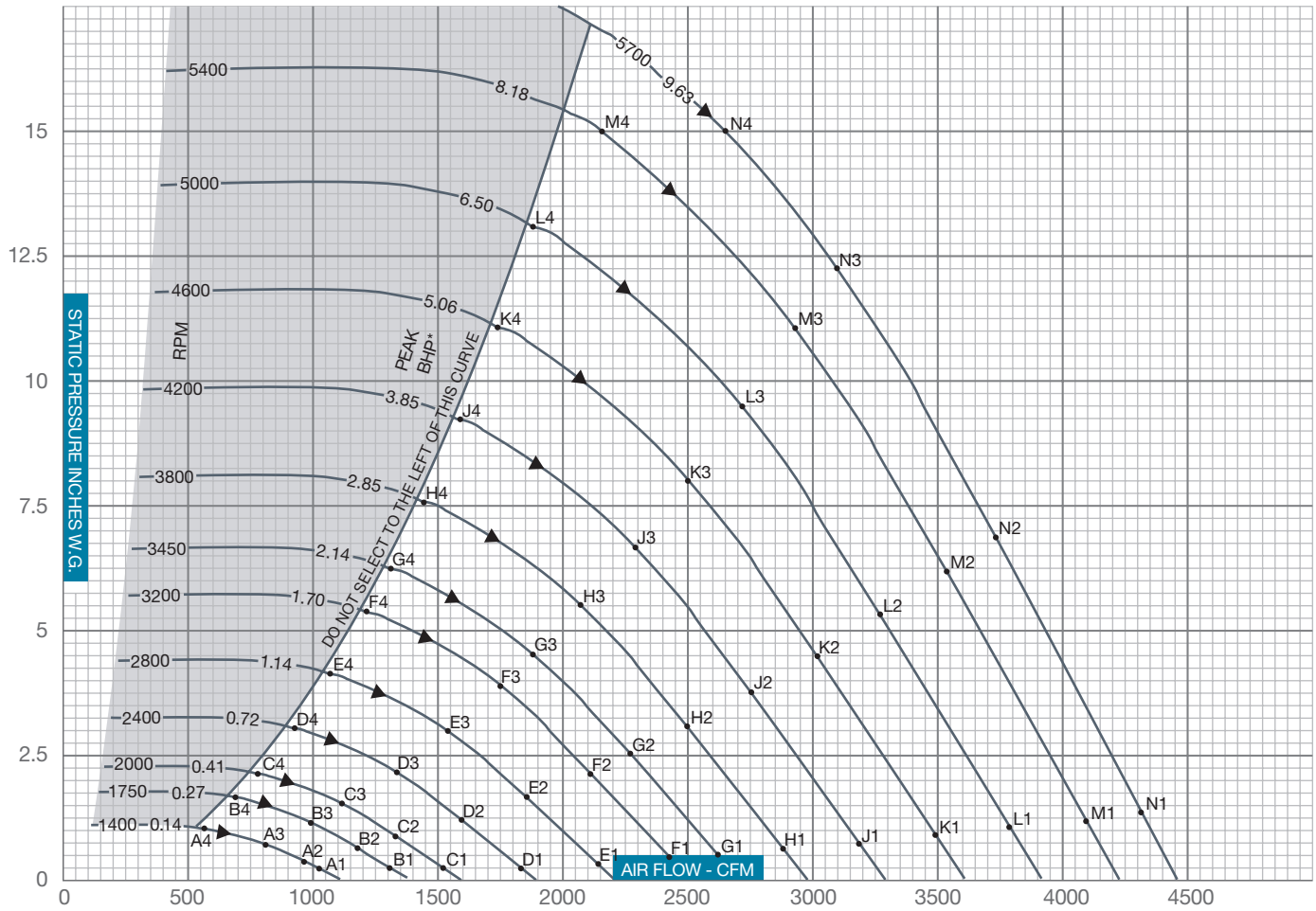

▲ PEAK STATIC EFFICIENCY
* Peak BHP does not include drive losses

$$\% \text{ STATIC EFFICIENCY} = \frac{\text{CFM x SP x .0157}}{\text{BHP}}$$

$$\text{Outlet Velocity (OV) in feet per minute} = \frac{\text{CFM}}{\text{Outlet Area}}$$

SOUND POWER LEVELS x 10^{-12} WATT

The sound power level ratings shown are in decibels, referred to 10^{-12} watts calculated per AMCA Standard 301. Values shown are for inlet L_{wi} sound power levels for installation Type B, free inlet, ducted outlet. Ratings do not include the effects of duct end correction.

FAN RPM	FAN SP	SOUND POINT	BAND / FREQUENCY 1 / 63	2 / 125	3 / 250	4 / 500	5 / 1000	6 / 2000	7 / 4000	8 / 8000
1400	0.25	A1	65	67	69	62	61	61	57	52
	0.41	A2	65	66	67	61	59	58	53	47
	0.74	A3	65	65	65	60	58	56	51	47
	1.07	A4	70	69	68	63	60	57	53	48
1750	0.25	B1	71	71	77	69	65	68	64	60
	0.64	B2	71	71	75	67	64	65	59	54
	1.16	B3	71	71	71	66	63	62	58	53
	1.67	B4	77	75	75	70	65	64	59	55
2000	0.25	C1	75	75	80	74	69	70	70	65
	0.84	C2	75	75	78	72	67	67	63	58
	1.51	C3	74	75	75	71	67	65	61	57
	2.18	C4	80	79	79	74	69	67	63	59
2400	0.25	D1	81	80	83	81	74	74	74	71
	1.21	D2	80	80	82	79	72	71	69	63
	2.18	D3	79	80	80	77	72	70	67	62
	3.15	D4	83	85	84	81	74	71	68	64
2800	0.33	E1	86	85	86	88	78	77	78	75
	1.65	E2	84	85	85	85	77	74	73	68
	2.96	E3	83	85	84	82	76	73	71	66
	4.28	E4	86	90	88	86	79	75	73	68
3200	0.43	F1	90	88	88	93	82	79	82	78
	2.15	F2	88	89	88	90	80	77	77	72
	3.87	F3	87	89	87	86	80	76	75	70
	5.59	F4	88	95	91	90	83	78	76	72
3450	0.50	G1	92	91	89	95	84	80	84	80
	2.50	G2	90	91	90	92	82	79	80	74

FAN RPM	FAN SP	SOUND POINT	BAND / FREQUENCY 1 / 63	2 / 125	3 / 250	4 / 500	5 / 1000	6 / 2000	7 / 4000	8 / 8000
3450	4.50	G3	89	91	90	88	82	78	77	72
	6.50	G4	89	97	93	92	85	80	78	74
3800	0.61	H1	94	94	92	97	88	83	85	83
	3.03	H2	92	94	93	94	86	81	81	77
	5.46	H3	90	93	92	91	85	80	79	75
	7.89	H4	91	99	96	95	88	83	81	77
4200	0.74	J1	96	97	95	99	92	85	87	86
	3.71	J2	93	96	95	96	90	84	83	80
	6.67	J3	92	96	95	94	88	83	81	78
	9.63	J4	93	100	100	98	92	86	83	79
4600	0.89	K1	97	100	98	100	95	88	89	88
	4.44	K2	95	99	98	98	93	86	85	82
	8.00	K3	94	98	98	96	91	86	84	80
	11.56	K4	94	102	103	100	95	88	85	82
5000	1.05	L1	99	102	100	101	99	90	90	90
	5.25	L2	96	101	100	100	96	89	87	85
	9.45	L3	95	100	100	98	94	88	85	83
	13.65	L4	96	104	105	102	98	91	87	84
5400	1.22	M1	100	105	102	103	102	92	91	92
	6.12	M2	98	103	103	102	99	91	89	87
	11.02	M3	96	102	102	100	96	90	87	85
	15.00	M4	97	104	106	103	99	92	88	86
5700	1.36	N1	101	106	104	104	104	94	92	94
	6.82	N2	99	105	104	103	101	92	90	89
	12.28	N3	97	104	104	102	98	92	88	87
	15.00	N4	98	105	107	104	100	93	89	88

BCS-135 SINGLE WIDTH

WHEEL DIAMETER: 13.50"
WHEEL CIRCUMFERENCE: 3.53'
OUTLET AREA: 0.996 SQ. FT.
OUTLET SIZE: 10 11/16" X 13 7/16"
INLET DIAMETER: 14 3/8" O.D.

MAX SPEEDS	CLASS 1	CLASS 2	CLASS 3
Up to 250°F	3586	4678	5172
251°F to 400°F*	3407	4444	4913
401°F to 700°F*	2941	3836	4241
Above 700°F	CONTACT FACTORY		

*Special hi-temp construction required
Tip Speed (fpm) = 3.53 x RPM
Max BHP = 0.085 x (RPM/1000)^3

		0.25" SP		0.50" SP		0.75" SP		1.00" SP		1.50" SP		2.00" SP		2.50" SP		3.00" SP		3.50" SP	
CFM	OV	RPM	BHP	RPM	BHP	RPM	BHP	RPM	BHP	RPM	BHP	RPM	BHP	RPM	BHP	RPM	BHP	RPM	BHP
700	700	858	0.05	1011	0.09	1151	0.13	1278	0.17										
800	800	937	0.06	1073	0.10	1203	0.15	1325	0.20	1546	0.30								
900	900	1019	0.08	1145	0.12	1264	0.17	1375	0.22	1585	0.33	1777	0.46						
1000	1000	1103	0.10	1221	0.14	1327	0.19	1436	0.25	1633	0.37	1812	0.50	1985	0.64				
1100	1100	1188	0.12	1300	0.17	1401	0.22	1497	0.28	1683	0.41	1859	0.54	2019	0.69	2176	0.84		
1200	1200	1274	0.14	1381	0.20	1477	0.25	1565	0.32	1743	0.45	1908	0.59	2064	0.74	2210	0.90	2355	1.07
1300	1300	1362	0.17	1474	0.23	1554	0.29	1640	0.35	1804	0.49	1961	0.64	2113	0.80	2254	0.96	2389	1.14
1400	1400	1451	0.20	1547	0.27	1634	0.33	1717	0.40	1867	0.54	2022	0.70	2162	0.86	2303	1.03	2433	1.21
1500	1500	1540	0.24	1632	0.31	1716	0.38	1794	0.45	1940	0.70	2083	0.76	2221	0.93	2351	1.11	2481	1.29
1600	1600	1630	0.28	1718	0.35	1799	0.43	1874	0.50	2015	0.66	2145	0.82	2281	1.00	2407	1.19	2530	1.38
1700	1700	1720	0.33	1805	0.40	1883	0.48	1955	0.56	2091	0.72	2216	0.89	2343	1.08	2467	1.27	2583	1.47
1800	1800	1812	0.38	1892	0.46	1968	0.54	2038	0.62	2168	0.79	2291	0.97	2405	1.16	2528	1.36	2643	1.56
1900	1900	1903	0.44	1981	0.52	2053	0.61	2121	0.69	2247	0.87	2366	1.06	2477	1.25	2590	1.45	2704	1.66
2000	2000	1995	0.51	2069	0.59	2139	0.68	2205	0.77	2328	0.95	2443	1.15	2552	1.35	2653	1.55	2765	1.77
2100	2100	2087	0.58	2159	0.67	2226	0.76	2290	0.85	2409	1.04	2521	1.24	2627	1.45	2727	1.66	2827	1.88

		4.00" SP		4.50" SP		5.00" SP		5.50" SP		6.00" SP		6.50" SP		7.00" SP		7.50" SP		8.00" SP	
CFM	OV	RPM	BHP	RPM	BHP	RPM	BHP	RPM	BHP	RPM	BHP	RPM	BHP	RPM	BHP	RPM	BHP	RPM	BHP
1400	1400	2557	1.40	2683	1.59	2803	1.80												
1500	1500	2603	1.48	2717	1.68	2837	1.89	2950	2.11										
1600	1600	2651	1.57	2765	1.78	2873	1.99	2984	2.21	3093	2.44	3197	2.67						
1700	1700	2699	1.67	2813	1.88	2921	2.10	3024	2.32	3127	2.55	3231	2.79	3331	3.03	3428	3.28		
1800	1800	2751	1.77	2862	1.99	2969	2.21	3072	2.44	3170	2.67	3265	2.91	3365	3.16	3461	3.42	3555	3.68
1900	1900	2811	1.88	2912	2.11	3018	2.34	3120	2.57	3218	2.81	3312	3.05	3403	3.30	3495	3.56	3589	3.83
2000	2000	2871	2.00	2972	2.23	3068	2.46	3169	2.70	3266	2.95	3360	3.20	3450	3.46	3538	3.71	3623	3.98
2100	2100	2932	2.12	3032	2.35	3128	2.60	3219	2.84	3315	3.10	3408	3.36	3499	3.62	3586	3.88	3670	4.15
2200	2200	2994	2.24	3093	2.59	3188	2.74	3279	2.99	3367	3.25	3457	3.52	3547	3.78	3634	4.06	3718	4.34
2300	2300	3057	2.38	3155	2.63	3249	2.88	3339	3.15	3426	3.41	3510	3.68	3596	3.96	3683	4.24	3767	4.52
2400	2400	3131	2.52	3218	2.78	3311	3.04	3400	3.31	3486	3.58	3570	3.86	3650	4.14	3732	4.43	3816	4.72
2500	2500	3205	2.68	3287	2.93	3373	3.20	3462	3.48	3547	3.76	3630	4.04	3710	4.33	3788	4.62	3865	4.92
2600	2600	3280	2.84	3361	3.10	3439	3.37	3524	3.65	3609	3.94	3691	4.23	3770	4.53	3848	4.83	3923	5.13
2700	2700	3356	3.01	3436	3.28	3513	3.56	3587	3.84	3671	4.13	3752	4.43	3831	4.73	3908	5.04	3983	5.35
2800	2800	3433	3.19	3512	3.47	3587	3.75	3661	4.04	3733	4.33	3814	4.64	3893	4.95	3969	5.26	4043	5.58
2900	2900	3510	3.38	3588	3.66	3662	3.95	3735	4.25	3805	4.55	3877	4.85	3955	5.17	4030	5.49	4104	5.82
3000	3000	3588	3.58	3664	3.87	3738	4.17	3810	4.47	3879	4.77	3947	5.08	4017	5.40	4092	5.73	4166	6.06
3100	3100	3667	3.78	3742	4.08	3815	4.39	3886	4.70	3953	5.01	4021	5.33	4086	5.65	4155	5.98	4228	6.32
3200	3200	3748	4.00	3820	4.31	3892	4.62	3962	4.93	4030	5.25	4096	5.58	4160	5.91	4223	6.24	4290	6.58
3300	3300	3829	4.23	3899	4.54	3969	4.86	4038	5.18	4106	5.51	4171	5.84	4235	6.18	4297	6.52	4358	6.86

		8.50" SP		9.00" SP		9.50" SP		10.00" SP		11.00" SP		12.00" SP		13.00" SP		14.00" SP		15.00" SP	
CFM	OV	RPM	BHP	RPM	BHP	RPM	BHP	RPM	BHP	RPM	BHP	RPM	BHP	RPM	BHP	RPM	BHP	RPM	BHP
1900	1900	3679	4.10	3767	4.38														
2000	2000	3713	4.26	3801	4.54	3887	4.83	3970	5.12										
2100	2100	3753	4.43	3835	4.71	3921	5.00	4004	5.30	4165	5.91								
2200	2200	3800	4.62	3880	4.90	3958	5.19	4038	5.49	4199	6.11	4352	6.75						
2300	2300	3848	4.81	3928	5.10	4005	5.40	4081	5.70	4233	6.32	4386	6.97	4533	7.64				
2400	2400	3897	5.01	3976	5.31	4053	5.62	4129	5.92	4274	6.55	4420	7.20	4567	7.87	4709	8.57	4846	9.27
2500	2500	3946	5.22	4025	5.53	4102	5.84	4177	6.15	4322	6.79	4461	7.44	4602	8.12	4743	8.82	4890	9.54
2600	2600	3996	5.44	4074	5.75	4150	6.07	4225	6.39	4370	7.04	4509	7.71	4642	8.38	4777	9.09	4914	9.82
2700	2700	4056	5.67	4126	5.99	4199	6.31	4274	6.64	4418	7.30	4557	7.98	4690	8.67	4818	9.37	4948	10.10
2800	2800	4116	5.90	4186	6.23	4255	6.56	4323	6.89	4467	7.57	4605	8.26	4738	8.97	4866	9.68	4990	10.41
2900	2900	4176	6.15	4246	6.48	4315	6.81	4382	7.15	4516	7.85	4654	8.55	4786	9.27	4914	10.00	5038	10.75
3000	3000	4237	6.40	4307	6.74	4375	7.08	4442	7.43	4571	8.13	4703	8.85	4835	9.59	4962	10.33	5086	11.09
3100	3100	4299	6.66	4368	7.01	4436	7.36	4502	7.71	4631	8.43	4754	9.16	4884	9.91	5011	10.67	5134	11.44
3200	3200	4361	6.93	4429	7.28	4497	7.64	4563	8.00	4691	8.73	4814	9.48	4933	10.25	5060	11.01		
3300	3300	4423	7.21	4492	7.57	4558	7.94	4624	8.30	4751	9.05	4874	9.81	4992	10.58	5109	11.37		
3400	3400	4491	7.51	4554	7.87	4621	8.24	4686	8.62	4812	9.38	4934	10.15	5052	10.94	5166	11.73		
3500	3500	4565	7.82	4622	8.18	4683	8.56	4748	8.94	4874	9.71	4995	10.50	5112	11.30				
3600	3600	4639	8.14	4696	8.52	4752	8.89	4811	9.27	4936	10.06	5056	10.86						

Performance shown is for installation type B & D - Free or ducted inlet, Ducted outlet. Underlined ratings indicate maximum static efficiency. Power rating (BHP) does not include drive losses. Performance ratings do not include the effects of appurtenances in the airstream. NOTE: Ratings shown apply also to model QBCS.

CLASS 1 | CLASS 2 | CLASS 3

BCS-135 SINGLE WIDTH

CONSTANT SPEED PERFORMANCE CURVES

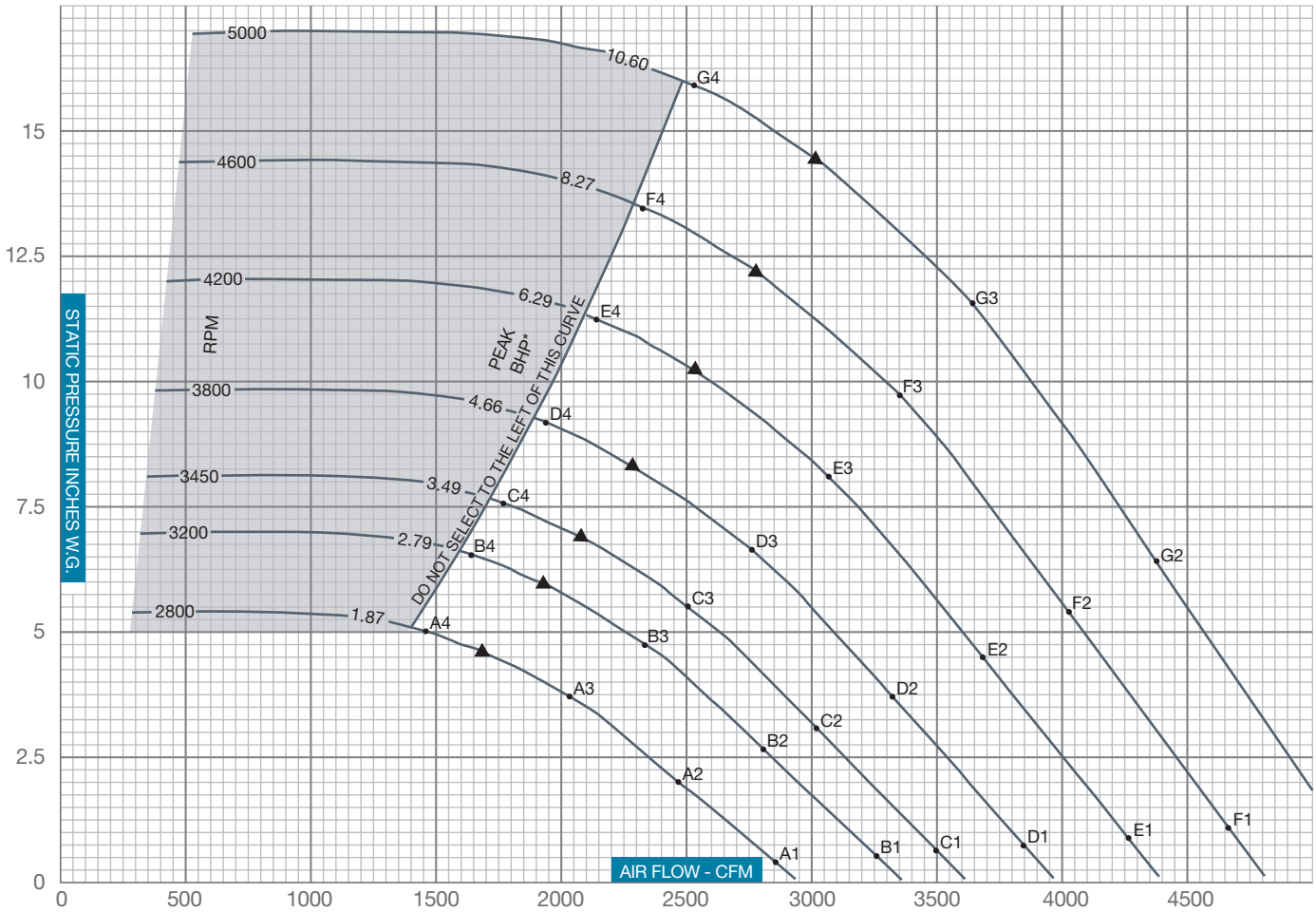

▲ PEAK STATIC EFFICIENCY
* Peak BHP does not include drive losses

$$\%\text{STATIC EFFICIENCY} = \frac{\text{CFM x SP x .0157}}{\text{BHP}}$$

$$\text{Outlet Velocity (OV) in feet per minute} = \frac{\text{CFM}}{\text{Outlet Area}}$$

SOUND POWER LEVELS x 10^{-12} WATT

The sound power level ratings shown are in decibels, referred to 10^{-12} watts calculated per AMCA Standard 301. Values shown are for inlet L_{wi} sound power levels for installation Type B, free inlet, ducted outlet. Ratings do not include the effects of duct end correction.

FAN RPM	FAN SP	SOUND POINT	BAND / FREQUENCY 1 / 63	2 / 125	3 / 250	4 / 500	5 / 1000	6 / 2000	7 / 4000	8 / 8000
1000	0.25	A1	59	62	58	55	55	51	46	40
	0.26	A2	59	62	58	55	55	51	46	40
	0.46	A3	59	60	57	54	53	49	45	40
	0.66	A4	63	64	60	56	55	51	46	42
1200	0.25	B1	64	67	66	60	60	59	54	49
	0.37	B2	64	66	65	60	59	57	51	45
	0.66	B3	64	65	63	59	57	55	50	45
	0.96	B4	69	68	66	62	59	56	52	47
1400	0.25	C1	68	70	73	65	64	64	60	56
	0.50	C2	69	70	71	64	62	61	56	50
	0.90	C3	68	69	68	63	61	59	54	50
	1.30	C4	74	72	72	66	63	60	56	51
1750	0.25	D1	75	74	80	72	68	71	68	64
	0.78	D2	75	75	78	71	67	68	62	57
	1.41	D3	75	75	75	70	66	65	61	56
	2.03	D4	81	78	79	73	68	67	62	58
2000	0.25	E1	79	78	84	77	72	74	72	69
	1.02	E2	79	79	81	75	70	70	66	61
	1.84	E3	78	78	78	74	70	68	64	60
	2.65	E4	83	83	82	77	72	70	66	61
2400	0.29	F1	85	84	87	84	77	77	77	74
	1.47	F2	84	84	85	82	75	74	72	66
	2.65	F3	83	84	83	80	75	72	70	65
	3.82	F4	87	89	87	84	77	74	71	67
2800	0.40	G1	89	88	89	91	81	80	81	78
	2.00	G2	88	89	88	88	80	77	76	71

FAN RPM	FAN SP	SOUND POINT	BAND / FREQUENCY 1 / 63	2 / 125	3 / 250	4 / 500	5 / 1000	6 / 2000	7 / 4000	8 / 8000
2800	3.60	G3	87	88	87	85	79	76	74	69
	5.20	G4	89	94	91	89	82	78	75	71
3200	0.52	H1	93	92	91	96	85	82	85	81
	2.61	H2	92	92	91	93	83	80	80	75
	4.70	H3	90	92	91	90	83	79	78	73
	6.79	H4	92	98	95	94	86	81	79	75
3450	0.61	J1	96	94	93	98	87	83	87	83
	3.04	J2	94	95	93	95	85	81	82	77
	5.47	J3	92	94	93	92	85	81	80	75
	7.89	J4	93	101	97	96	88	83	81	77
3800	0.74	K1	97	97	95	100	90	86	88	86
	3.68	K2	95	97	96	97	89	84	84	80
	6.63	K3	94	97	96	94	88	83	82	78
	9.58	K4	95	102	100	98	91	86	84	80
4200	0.90	L1	99	100	98	102	95	88	90	89
	4.50	L2	97	100	99	99	93	87	86	83
	8.10	L3	96	99	99	97	91	86	84	81
	11.70	L4	96	104	103	101	95	89	86	82
4600	1.08	M1	101	103	101	103	98	91	92	91
	5.40	M2	99	102	101	101	96	89	87	85
	9.72	M3	97	102	101	99	94	89	87	83
	14.03	M4	98	106	106	103	98	91	88	85
5000	1.28	N1	102	106	103	105	102	93	93	93
	6.38	N2	100	105	104	103	99	92	90	88
	11.48	N3	99	104	104	101	97	91	88	86
	15.00	N4	99	106	107	104	100	93	89	87

BCS-150 SINGLE WIDTH

WHEEL DIAMETER: 15.00"
WHEEL CIRCUMFERENCE: 3.93'
OUTLET AREA: 1.241 SQ. FT.
OUTLET SIZE: 11 15/16" X 15"
INLET DIAMETER: 16½" O.D.

MAX SPEEDS	CLASS 1	CLASS 2	CLASS 3
Up to 250°F	3046	3973	4655
251°F to 400°F*	2894	3774	4422
401°F to 700°F*	2498	3258	3817
Above 700°F	CONTACT FACTORY		

*Special hi-temp construction required
Tip Speed (fpm) = 3.93 x RPM
Max BHP = 0.139 x (RPM/1000)^3

		0.25" SP		0.50" SP		0.75" SP		1.00" SP		1.50" SP		2.00" SP		2.50" SP		3.00" SP		3.50" SP	
CFM	OV	RPM	BHP	RPM	BHP	RPM	BHP	RPM	BHP	RPM	BHP	RPM	BHP	RPM	BHP	RPM	BHP	RPM	BHP
869	700	756	0.06	887	0.10	1005	0.14	1115	0.19	1328	0.30								
993	800	822	0.07	947	0.12	1055	0.16	1156	0.21	1348	0.33								
1117	900	885	0.09	1011	0.14	1110	0.19	1206	0.24	1379	0.36	1550	0.50						
1241	1000	953	0.11	1076	0.17	1173	0.22	1260	0.28	1425	0.40	1580	0.54	1731	0.69	1880	0.86		
1365	1100	1023	0.13	1142	0.20	1237	0.26	1320	0.31	1476	0.45	1620	0.59	1760	0.75	1897	0.92	2034	1.09
1489	1200	1094	0.16	1205	0.23	1302	0.30	1383	0.36	1530	0.49	1668	0.64	1797	0.81	1927	0.98	2052	1.16
1613	1300	1169	0.19	1270	0.27	1367	0.34	1447	0.41	1587	0.55	1720	0.70	1844	0.87	1962	1.05	2082	1.24
1738	1400	1245	0.23	1338	0.31	1432	0.39	1512	0.46	1650	0.61	1774	0.77	1895	0.94	2009	1.13	2117	1.32
1862	1500	1321	0.27	1407	0.35	1496	0.44	1578	0.52	1714	0.68	1831	0.84	1947	1.02	2059	1.21	2164	1.41
1986	1600	1398	0.31	1478	0.40	1560	0.49	1643	0.59	1778	0.76	1895	0.93	2003	1.11	2110	1.30	2213	1.50
2110	1700	1476	0.36	1549	0.46	1628	0.55	1707	0.65	1843	0.84	1958	1.02	2062	1.20	2165	1.40	2265	1.61
2234	1800	1554	0.42	1624	0.52	1697	0.62	1771	0.72	1908	0.93	2022	1.12	2125	1.31	2221	1.51	2318	1.72
2358	1900	1632	0.48	1700	0.58	1768	0.69	1836	0.80	1974	1.02	2087	1.23	2189	1.43	2283	1.63	2374	1.84
2482	2000	1711	0.55	1776	0.66	1839	0.77	1905	0.88	2038	1.11	2152	1.34	2253	1.55	2346	1.76	2433	1.98
2607	2100	1790	0.62	1852	0.74	1911	0.85	1975	0.97	2102	1.21	2217	1.45	2318	1.68	2410	1.91	2496	2.13

		4.00" SP		4.50" SP		5.00" SP		5.50" SP		6.00" SP		6.50" SP		7.00" SP		7.50" SP		8.00" SP	
CFM	OV	RPM	BHP	RPM	BHP	RPM	BHP	RPM	BHP	RPM	BHP	RPM	BHP	RPM	BHP	RPM	BHP	RPM	BHP
1738	1400	2229	1.52	2339	1.73	2446	1.95	2554	2.18	2656	2.41								
1862	1500	2265	1.61	2369	1.83	2472	2.05	2571	2.28	2674	2.52	2772	2.77						
1986	1600	2312	1.71	2407	1.93	2503	2.16	2601	2.40	2695	2.64	2790	2.89	2884	3.15	2976	3.42		
2110	1700	2361	1.82	2454	2.05	2543	2.28	2632	2.52	2726	2.77	2816	3.03	2903	3.29	2993	3.56	3082	3.84
2234	1800	2412	1.94	2502	2.17	2590	2.41	2675	2.66	2757	2.91	2847	3.17	2933	3.44	3017	3.71	3099	3.99
2358	1900	2465	2.07	2554	2.31	2639	2.55	2722	2.80	2804	3.06	2882	3.32	2964	3.59	3047	3.88	3128	4.16
2482	2000	2520	2.21	2606	2.45	2690	2.70	2772	2.95	2851	3.21	2929	3.49	3004	3.76	3078	4.04	3159	4.34
2607	2100	2577	2.35	2661	2.60	2743	2.85	2823	3.11	2900	3.38	2976	3.66	3051	3.94	3123	4.23	3194	4.52
2731	2200	2639	2.52	2718	2.76	2798	3.02	2875	3.29	2952	3.56	3026	3.84	3098	4.13	3170	4.42	3240	4.72
2855	2300	2703	2.70	2778	2.94	2854	3.20	2930	3.47	3004	3.75	3078	4.04	3149	4.33	3218	4.62	3287	4.93
2979	2400	2767	2.89	2842	3.14	2913	3.39	2986	3.66	3059	3.95	3130	4.24	3201	4.54	3270	4.84	3336	5.15
3103	2500	2831	3.08	2906	3.35	2977	3.61	3045	3.87	3115	4.16	3185	4.46	3253	4.76	3321	5.07	3388	5.39
3227	2600	2895	3.28	2969	3.56	3040	3.84	3108	4.11	3173	4.39	3241	4.69	3309	4.99	3374	5.31	3440	5.63
3351	2700	2960	3.50	3033	3.78	3104	4.07	3172	4.36	3236	4.64	3299	4.93	3365	5.24	3430	5.56	3493	5.89
3476	2800	3025	3.71	3098	4.02	3168	4.31	3235	4.62	3300	4.91	3362	5.21	3422	5.50	3486	5.83	3548	6.16
3600	2900	3090	3.94	3163	4.26	3232	4.57	3299	4.88	3364	5.19	3425	5.50	3485	5.80	3543	6.11	3605	6.44
3724	3000	3155	4.18	3228	4.51	3297	4.83	3363	5.15	3427	5.47	3489	5.80	3549	6.11	3606	6.43	3663	6.75
3848	3100	3221	4.43	3293	4.77	3362	5.11	3428	5.44	3491	5.77	3553	6.10	3613	6.44	3670	6.76	3726	7.09
3972	3200	3286	4.68	3359	5.04	3427	5.39	3493	5.74	3556	6.08	3617	6.42	3676	6.76	3734	7.11	3789	7.44
4096	3300	3350	4.94	3425	5.32	3492	5.68	3558	6.04	3621	6.40	3681	6.75	3740	7.10	3797	7.46	3853	7.81

		8.50" SP		9.00" SP		9.50" SP		10.00" SP		11.00" SP		12.00" SP		13.00" SP		14.00" SP		15.00" SP	
CFM	OV	RPM	BHP	RPM	BHP	RPM	BHP	RPM	BHP	RPM	BHP	RPM	BHP	RPM	BHP	RPM	BHP	RPM	BHP
2358	1900	3207	4.45	3286	4.75	3367	5.05	3445	5.36	3597	5.99								
2482	2000	3237	4.63	3313	4.93	3387	5.24	3463	5.55	3615	6.20	3760	6.86						
2607	2100	3268	4.82	3344	5.13	3418	5.44	3490	5.76	3632	6.41	3777	7.09	3917	7.78				
2731	2200	3308	5.02	3375	5.33	3449	5.65	3521	5.98	3660	6.64	3795	7.32	3934	8.03	4068	8.75		
2855	2300	3355	5.24	3421	5.56	3486	5.88	3552	6.20	3690	6.88	3823	7.57	3952	8.28	4086	9.02	4215	9.77
2979	2400	3402	5.46	3468	5.79	3532	6.11	3595	6.45	3721	7.13	3854	7.83	3981	8.56	4104	9.29	4232	10.06
3103	2500	3452	5.70	3516	6.03	3579	6.36	3642	6.70	3762	7.39	3885	8.10	4012	8.84	4134	9.59	4252	10.36
3227	2600	3504	5.96	3567	6.29	3628	6.62	3689	6.96	3809	7.67	3924	8.39	4043	9.13	4165	9.90	4283	10.68
3351	2700	3556	6.22	3618	6.56	3679	6.90	3739	7.25	3856	7.96	3971	8.69	4082	9.44	4196	10.21	4314	11.00
3476	2800	3610	6.49	3670	6.84	3731	7.19	3790	7.54	3905	8.26	4018	9.00	4128	9.76	4235	10.54	4345	11.34
3600	2900	3665	6.79	3725	7.13	3783	7.48	3842	7.85	3956	8.58	4066	9.33	4175	10.10	4282	10.89	4384	11.69
3724	3000	3722	7.09	3781	7.44	3838	7.80	3895	8.16	4008	8.91	4117	9.67	4223	10.45	4329	11.25	4431	12.07
3848	3100	3780	7.42	3837	7.77	3894	8.13	3950	8.50	4060	9.25	4169	10.03	4274	10.82	4376	11.63	4478	12.46
3972	3200	3843	7.78	3896	8.12	3950	8.47	4006	8.85	4115	9.62	4221	10.40	4325	11.21	4426	12.02	4525	12.86
4096	3300	3907	8.16	3959	8.50	4011	8.85	4063	9.21	4170	9.99	4274	10.79	4377	11.60	4478	12.44	4576	13.28
4220	3400	3971	8.55	4023	8.91	4074	9.26	4124	9.62	4226	10.39	4330	11.19	4429	12.01	4530	12.86	4627	13.72
4345	3500	4034	8.95	4087	9.32	4137	9.69	4187	10.05	4284	10.80	4386	11.61	4485	12.45	4582	13.30		
4469	3600	4098	9.35	4150	9.74	4201	10.13	4251	10.50	4347	11.26	4442	12.05	4541	12.90	4636	13.76		

Performance shown is for installation type B & D - Free or ducted inlet, Ducted outlet. Underlined ratings indicate maximum static efficiency. Power rating (BHP) does not include drive losses. Performance ratings do not include the effects of appurtenances in the airstream. NOTE: Ratings shown apply also to model QBCS.

CLASS 1 | CLASS 2 | CLASS 3

BCS-150 SINGLE WIDTH

CONSTANT SPEED PERFORMANCE CURVES

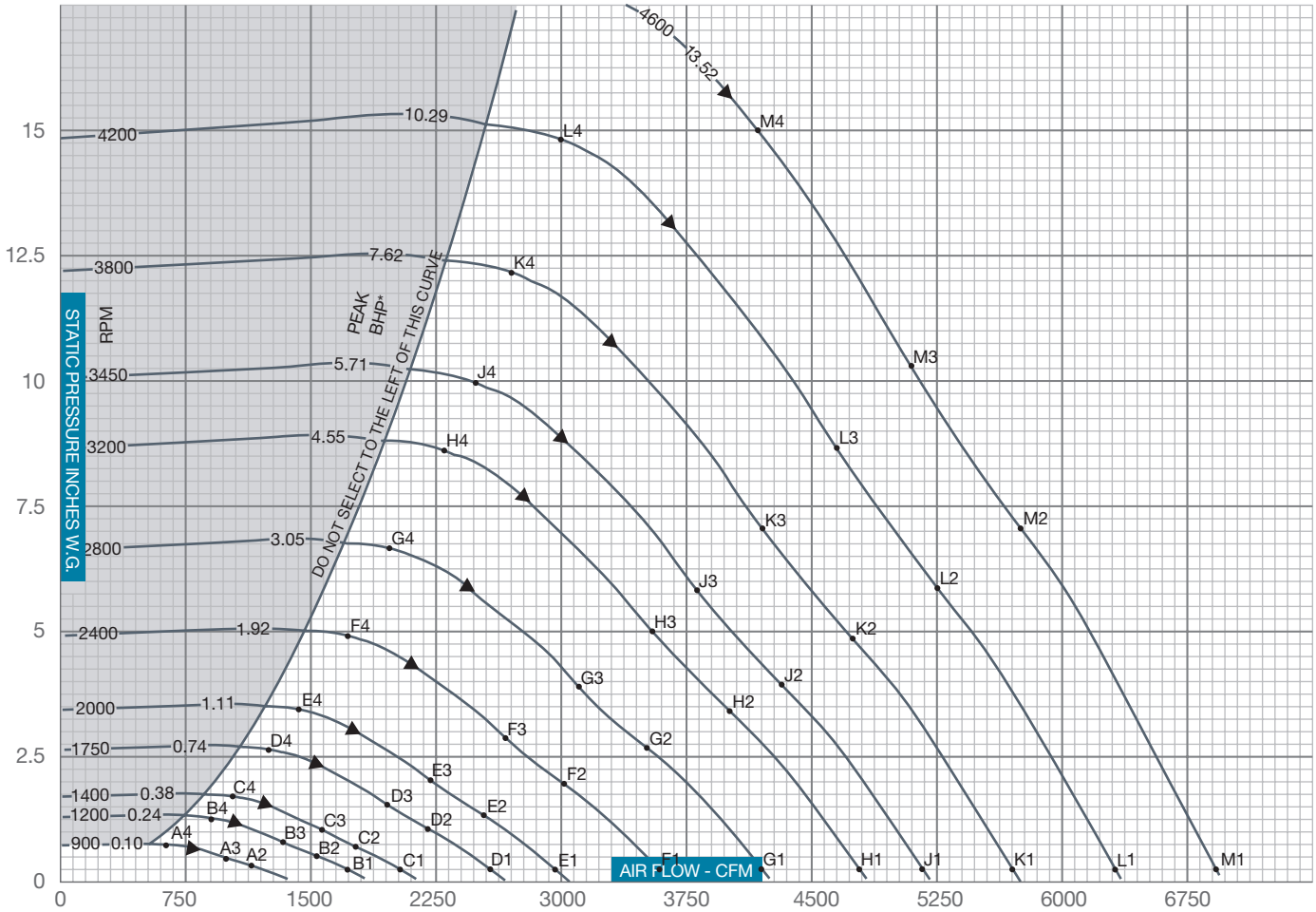

▲ PEAK STATIC EFFICIENCY
* Peak BHP does not include drive losses

$$\% \text{ STATIC EFFICIENCY} = \frac{\text{CFM x SP x .0157}}{\text{BHP}}$$

$$\text{Outlet Velocity (OV) in feet per minute} = \frac{\text{CFM}}{\text{Outlet Area}}$$

SOUND POWER LEVELS x 10^{-12} WATT

The sound power level ratings shown are in decibels, referred to 10^{-12} watts calculated per AMCA Standard 301. Values shown are for inlet L_{wi} sound power levels for installation Type B, free inlet, ducted outlet. Ratings do not include the effects of duct end correction.

FAN RPM	FAN SP	SOUND POINT	BAND / FREQUENCY 1 / 63	2 / 125	3 / 250	4 / 500	5 / 1000	6 / 2000	7 / 4000	8 / 8000
900	0.27	A2	61	66	65	64	62	56	49	42
	0.40	A3	60	64	64	64	61	55	48	42
	0.68	A4	63	63	62	61	59	54	48	42
1200	0.25	B1	68	71	75	71	71	66	61	56
	0.48	B2	68	71	75	70	70	65	58	52
	0.70	B3	67	70	73	70	70	64	58	51
	1.21	B4	74	69	72	67	67	63	57	51
1400	0.25	C1	72	74	81	75	75	71	67	62
	0.65	C2	72	74	80	74	74	70	63	56
	0.96	C3	71	73	78	73	74	69	62	56
	1.65	C4	79	73	77	70	71	67	62	56
1750	0.25	D1	76	80	85	83	81	78	73	69
	1.02	D2	76	80	84	81	79	76	70	63
	1.50	D3	75	79	82	80	78	76	69	63
	2.57	D4	83	82	81	78	76	73	68	62
2000	0.25	E1	79	83	87	87	84	82	77	73
	1.33	E2	78	83	86	86	82	80	74	68
	1.95	E3	77	82	85	85	81	80	74	67
	3.36	E4	85	87	84	83	78	77	72	66
2400	0.25	F1	83	88	90	93	88	87	83	78
	1.91	F2	82	88	89	92	85	85	80	73
	2.81	F3	80	87	88	90	85	85	79	73
	4.84	F4	88	94	88	89	82	82	78	72

FAN RPM	FAN SP	SOUND POINT	BAND / FREQUENCY 1 / 63	2 / 125	3 / 250	4 / 500	5 / 1000	6 / 2000	7 / 4000	8 / 8000
2800	0.25	G1	86	92	93	98	91	91	87	83
	2.60	G2	84	92	92	97	89	90	85	78
	3.83	G3	83	91	92	95	88	89	84	77
	6.58	G4	91	99	92	94	86	86	82	77
3200	0.25	H1	88	94	96	100	96	94	91	87
	3.40	H2	87	94	96	99	94	92	89	82
	5.00	H3	85	93	95	97	93	92	88	82
	8.60	H4	93	101	97	96	90	89	86	81
3450	0.25	J1	90	96	98	101	98	96	93	89
	3.95	J2	88	95	98	101	96	94	91	85
	5.81	J3	87	94	97	99	95	93	90	84
	9.99	J4	95	103	100	97	93	90	88	83
3800	0.25	K1	91	98	101	103	101	98	96	91
	4.79	K2	90	97	100	102	100	96	94	88
	7.05	K3	88	96	99	101	98	95	93	87
	12.12	K4	96	104	104	100	96	92	91	86
4200	0.25	L1	93	100	103	105	104	100	98	94
	5.86	L2	91	99	103	104	103	98	97	91
	8.61	L3	90	98	102	103	101	97	96	90
	14.81	L4	98	106	107	102	100	94	94	89
4600	0.25	M1	95	102	105	106	107	102	101	97
	7.02	M2	93	101	105	106	106	100	99	94
	10.33	M3	92	99	104	104	104	99	99	93
	15.00	M4	97	104	108	104	104	97	97	93

BCS-165 SINGLE WIDTH

WHEEL DIAMETER: 16.50"
WHEEL CIRCUMFERENCE: 4.32'
OUTLET AREA: 1.496 SQ. FT.
OUTLET SIZE: 13⅛" X 16⁷⁄₁₆"
INLET DIAMETER: 17½" O.D.

MAX SPEEDS	CLASS 1	CLASS 2	CLASS 3
Up to 250°F	2769	3612	4232
251°F to 400°F*	2631	3431	4020
401°F to 700°F*	2271	2962	3470
Above 700°F	CONTACT FACTORY		

*Special hi-temp construction required
Tip Speed (fpm) = 4.32 x RPM
Max BHP = 0.223 x $(RPM/1000)^3$

		0.25" SP		0.50" SP		0.75" SP		1.00" SP		1.50" SP		2.00" SP		2.50" SP		3.00" SP		3.50" SP	
CFM	OV	RPM	BHP	RPM	BHP	RPM	BHP	RPM	BHP	RPM	BHP	RPM	BHP	RPM	BHP	RPM	BHP	RPM	BHP
1051	700	687	0.07	806	0.12	913	0.17	1013	0.23	1207	0.36								
1201	800	747	0.09	861	0.14	959	0.20	1051	0.26	1225	0.40								
1351	900	805	0.11	919	0.17	1010	0.23	1096	0.29	1253	0.44	1409	0.60						
1502	1000	866	0.13	978	0.20	1066	0.27	1146	0.33	1296	0.49	1436	0.66	1574	0.84	1709	1.04		
1652	1100	930	0.16	1038	0.24	1124	0.31	1200	0.38	1342	0.54	1473	0.71	1600	0.90	1725	1.11	1849	1.32
1802	1200	995	0.19	1096	0.28	1183	0.36	1258	0.44	1391	0.60	1517	0.78	1634	0.97	1752	1.18	1865	1.41
1952	1300	1063	0.23	1154	0.32	1243	0.41	1316	0.50	1442	0.66	1563	0.85	1677	1.05	1784	1.27	1893	1.50
2103	1400	1132	0.27	1216	0.37	1302	0.47	1375	0.56	1500	0.74	1613	0.93	1723	1.14	1826	1.36	1925	1.59
2253	1500	1201	0.32	1279	0.42	1360	0.53	1434	0.63	1558	0.83	1665	1.02	1770	1.23	1871	1.46	1968	1.70
2403	1600	1271	0.38	1343	0.49	1418	0.60	1494	0.71	1616	0.92	1722	1.13	1821	1.34	1919	1.57	2012	1.82
2553	1700	1342	0.44	1409	0.55	1480	0.67	1551	0.79	1675	1.02	1780	1.24	1874	1.46	1968	1.69	2059	1.95
2703	1800	1412	0.50	1477	0.63	1543	0.75	1610	0.87	1734	1.12	1838	1.36	1932	1.59	2019	1.82	2107	2.08
2854	1900	1484	0.58	1545	0.71	1607	0.84	1670	0.97	1794	1.23	1897	1.48	1990	1.73	2075	1.97	2158	2.23
3004	2000	1555	0.66	1614	0.79	1671	0.93	1732	1.07	1853	1.35	1956	1.62	2048	1.88	2133	2.14	2211	2.39
3154	2100	1627	0.75	1684	0.89	1737	1.03	1796	1.18	1911	1.47	2016	1.76	2107	2.03	2191	2.31	2269	2.57

		4.00" SP		4.50" SP		5.00" SP		5.50" SP		6.00" SP		6.50" SP		7.00" SP		7.50" SP		8.00" SP	
CFM	OV	RPM	BHP	RPM	BHP	RPM	BHP	RPM	BHP	RPM	BHP	RPM	BHP	RPM	BHP	RPM	BHP	RPM	BHP
2103	1400	2027	1.84	2126	2.09	2224	2.36	2321	2.63	2415	2.92								
2253	1500	2059	1.95	2154	2.21	2248	2.48	2337	2.76	2431	3.05	2520	3.35						
2403	1600	2102	2.07	2188	2.34	2276	2.62	2365	2.91	2450	3.20	2536	3.50	2622	3.82	2705	4.14		
2553	1700	2146	2.21	2231	2.48	2312	2.76	2393	3.05	2478	3.36	2560	3.67	2639	3.98	2721	4.31	2802	4.64
2703	1800	2193	2.35	2275	2.63	2355	2.92	2432	3.21	2506	3.52	2588	3.84	2667	4.16	2742	4.49	2817	4.83
2854	1900	2241	2.50	2322	2.79	2399	3.08	2475	3.39	2549	3.70	2620	4.02	2695	4.35	2770	4.69	2844	5.03
3004	2000	2291	2.67	2369	2.96	2446	3.26	2520	3.57	2592	3.89	2662	4.22	2731	4.55	2799	4.89	2872	5.25
3154	2100	2342	2.84	2419	3.14	2493	3.45	2566	3.77	2637	4.09	2705	4.42	2773	4.77	2839	5.11	2903	5.47
3304	2200	2400	3.05	2470	3.34	2543	3.65	2614	3.98	2684	4.31	2751	4.65	2816	4.99	2882	5.35	2946	5.71
3455	2300	2457	3.27	2526	3.56	2594	3.87	2664	4.20	2731	4.53	2798	4.88	2863	5.24	2926	5.59	2988	5.96
3605	2400	2515	3.49	2583	3.80	2649	4.11	2715	4.43	2781	4.78	2845	5.13	2910	5.49	2972	5.86	3033	6.23
3755	2500	2573	3.73	2642	4.05	2706	4.37	2768	4.69	2832	5.03	2896	5.39	2957	5.76	3019	6.13	3080	6.52
3905	2600	2632	3.97	2699	4.31	2764	4.65	2825	4.98	2885	5.31	2947	5.67	3008	6.04	3067	6.42	3127	6.81
4055	2700	2691	4.23	2758	4.58	2822	4.93	2883	5.28	2942	5.62	2999	5.97	3059	6.34	3118	6.73	3175	7.12
4206	2800	2750	4.49	2816	4.86	2880	5.22	2941	5.59	3000	5.94	3056	6.30	3111	6.66	3169	7.05	3226	7.45
4356	2900	2809	4.77	2876	5.16	2938	5.53	2999	5.90	3058	6.28	3114	6.65	3168	7.02	3221	7.39	3277	7.80
4506	3000	2868	5.06	2934	5.45	2997	5.85	3057	6.24	3116	6.62	3172	7.02	3226	7.40	3279	7.78	3330	8.16
4656	3100	2929	5.36	2994	5.77	3056	6.18	3116	6.58	3174	6.98	3230	7.38	3284	7.79	3336	8.18	3387	8.58
4806	3200	2988	5.67	3053	6.09	3115	6.52	3176	6.95	3233	7.35	3288	7.77	3342	8.18	3394	8.60	3445	9.01
4957	3300	3045	5.98	3113	6.43	3175	6.87	3234	7.31	3292	7.74	3346	8.17	3400	8.59	3452	9.02	3503	9.45

		8.50" SP		9.00" SP		9.50" SP		10.00" SP		11.00" SP		12.00" SP		13.00" SP		14.00" SP		15.00" SP	
CFM	OV	RPM	BHP	RPM	BHP	RPM	BHP	RPM	BHP	RPM	BHP	RPM	BHP	RPM	BHP	RPM	BHP	RPM	BHP
2854	1900	2915	5.38	2987	5.74	3060	6.11	3132	6.49	3270	7.25								
3004	2000	2943	5.61	3012	5.97	3079	6.34	3148	6.72	3286	7.50	3418	8.30						
3154	2100	2971	5.83	3040	6.21	3107	6.59	3173	6.97	3302	7.76	3434	8.58	3561	9.42				
3304	2200	3008	6.08	3068	6.45	3135	6.84	3201	7.24	3327	8.04	3450	8.86	3577	9.72	3698	10.59		
3455	2300	3050	6.34	3110	6.72	3169	7.11	3229	7.51	3355	8.33	3475	9.16	3592	10.02	3714	10.91	3832	11.82
3605	2400	3093	6.61	3153	7.00	3211	7.40	3268	7.80	3383	8.62	3503	9.48	3619	10.35	3730	11.24	3848	12.17
3755	2500	3139	6.90	3196	7.29	3254	7.70	3311	8.11	3420	8.94	3532	9.80	3647	10.70	3758	11.60	3866	12.53
3905	2600	3185	7.21	3242	7.61	3298	8.01	3353	8.43	3463	9.28	3568	10.15	3675	11.05	3786	11.97	3894	12.92
4055	2700	3233	7.52	3289	7.93	3345	8.35	3399	8.77	3506	9.63	3610	10.51	3711	11.42	3814	12.35	3922	13.31
4206	2800	3282	7.86	3337	8.27	3392	8.70	3446	9.12	3550	9.99	3653	10.89	3753	11.81	3850	12.75	3950	13.72
4356	2900	3332	8.21	3386	8.63	3439	9.06	3493	9.49	3597	10.38	3696	11.28	3796	12.22	3892	13.18	3986	14.15
4506	3000	3383	8.58	3437	9.01	3489	9.44	3541	9.88	3644	10.78	3743	11.70	3839	12.64	3935	13.62	4028	14.61
4656	3100	3437	8.97	3488	9.40	3540	9.84	3591	10.29	3691	11.20	3790	12.14	3885	13.09	3978	14.07	4071	15.08
4806	3200	3494	9.41	3542	9.82	3591	10.25	3642	10.71	3741	11.64	3837	12.59	3932	13.56	4024	14.55	4114	15.56
4957	3300	3552	9.87	3599	10.29	3646	10.71	3693	11.15	3791	12.09	3886	13.05	3979	14.04	4071	15.05	4160	16.07
5107	3400	3610	10.35	3657	10.78	3703	11.21	3749	11.64	3842	12.57	3936	13.54	4027	14.54	4118	15.56	4206	16.60
5257	3500	3667	10.82	3715	11.28	3761	11.72	3806	12.17	3894	13.06	3987	14.05	4077	15.06	4165	16.09		
5407	3600	3725	11.32	3773	11.79	3819	12.25	3864	12.71	3951	13.63	4038	14.58	4128	15.61	4215	16.65		

Performance shown is for installation type B & D - Free or ducted inlet, Ducted outlet. Underlined ratings indicate maximum static efficiency. Power rating (BHP) does not include drive losses. Performance ratings do not include the effects of appurtenances in the airstream. NOTE: Ratings shown apply also to model QBCS.

CLASS 1 | CLASS 2 | CLASS 3

BCS-165 SINGLE WIDTH

CONSTANT SPEED PERFORMANCE CURVES

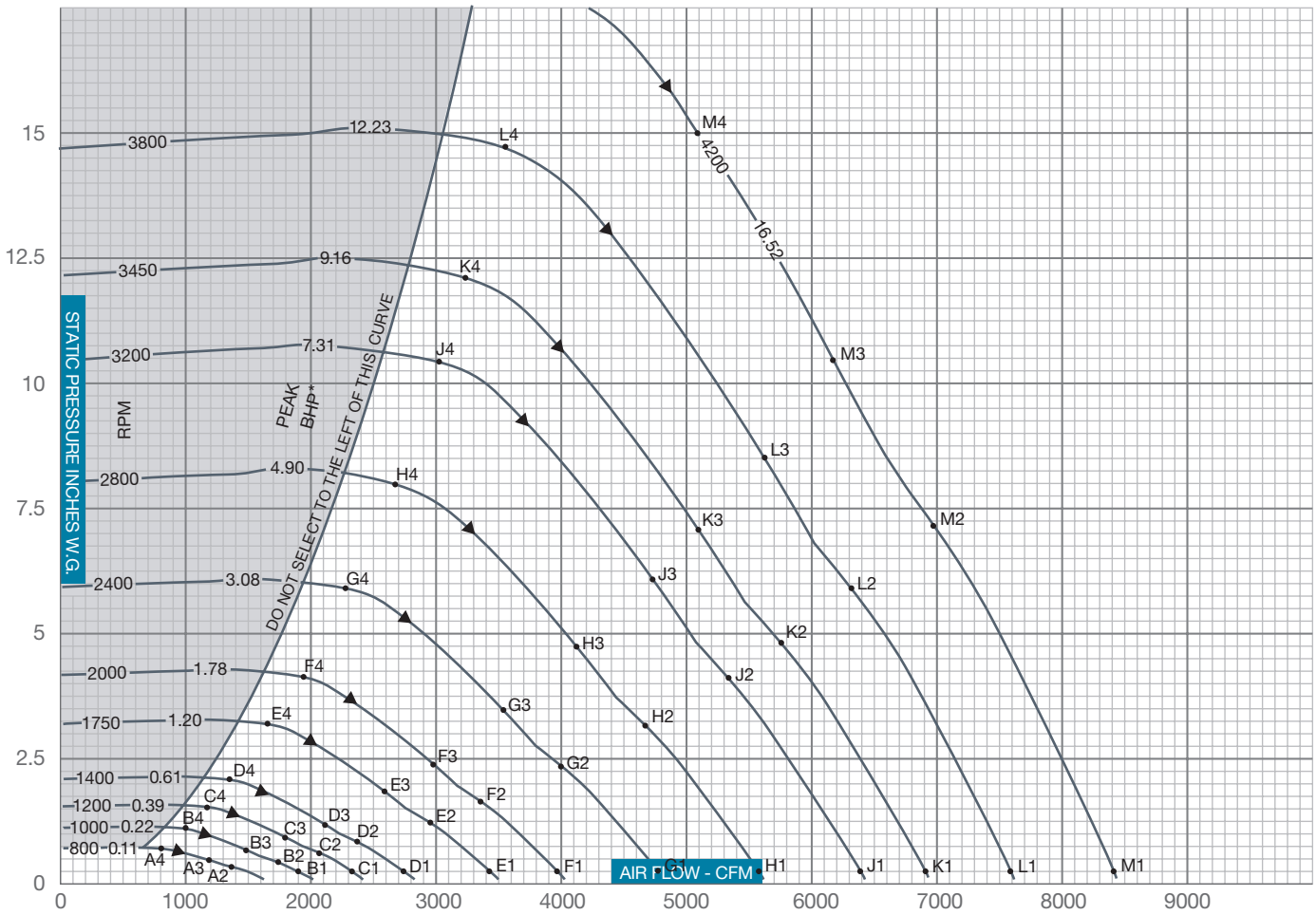

▲ PEAK STATIC EFFICIENCY
* Peak BHP does not include drive losses

$$\% \text{ STATIC EFFICIENCY} = \frac{\text{CFM x SP x .0157}}{\text{BHP}}$$

$$\text{Outlet Velocity (OV) in feet per minute} = \frac{\text{CFM}}{\text{Outlet Area}}$$

SOUND POWER LEVELS x 10^{-12} WATT

The sound power level ratings shown are in decibels, referred to 10^{-12} watts calculated per AMCA Standard 301. Values shown are for inlet L_{wi} sound power levels for installation Type B, free inlet, ducted outlet. Ratings do not include the effects of duct end correction.

FAN RPM	FAN SP	SOUND POINT	BAND / FREQUENCY 1 / 63	2 / 125	3 / 250	4 / 500	5 / 1000	6 / 2000	7 / 4000	8 / 8000
800	0.26	A2	61	68	65	65	61	55	48	42
	0.38	A3	60	65	64	64	61	54	48	41
	0.65	A4	62	64	61	61	59	53	48	42
1000	0.25	B1	67	71	73	70	69	64	58	55
	0.40	B2	67	71	72	69	68	62	55	49
	0.59	B3	66	70	71	69	67	62	55	48
	1.02	B4	71	69	69	66	65	60	54	48
1200	0.25	C1	72	75	80	74	74	70	64	60
	0.58	C2	72	75	79	73	73	68	61	54
	0.85	C3	71	73	77	73	73	67	60	54
	1.46	C4	78	73	75	70	70	66	60	54
1400	0.25	D1	75	78	84	78	78	74	69	65
	0.79	D2	75	77	83	77	77	73	66	59
	1.16	D3	74	77	81	76	77	72	65	58
	1.99	D4	83	77	80	73	74	70	64	59
1750	0.25	E1	80	84	88	86	84	81	76	72
	1.23	E2	79	83	87	84	82	79	73	66
	1.81	E3	78	82	85	83	81	79	72	65
	3.11	E4	87	85	84	81	78	76	71	65
2000	0.25	F1	83	87	90	91	87	85	80	76
	1.61	F2	82	87	90	89	85	83	77	71
	2.36	F3	81	86	88	88	84	82	77	70
	4.06	F4	89	91	87	86	81	80	75	69

FAN RPM	FAN SP	SOUND POINT	BAND / FREQUENCY 1 / 63	2 / 125	3 / 250	4 / 500	5 / 1000	6 / 2000	7 / 4000	8 / 8000
2400	0.25	G1	87	91	93	96	91	90	86	81
	2.31	G2	85	91	93	95	88	88	83	76
	3.40	G3	84	90	92	93	88	88	82	75
	5.85	G4	92	98	91	92	85	85	81	75
2800	0.25	H1	90	95	96	101	94	94	90	86
	3.15	H2	88	95	96	100	92	92	88	81
	4.63	H3	87	94	95	98	91	92	87	80
	7.96	H4	95	103	95	97	89	89	85	79
3200	0.25	J1	92	98	100	103	99	97	94	90
	4.11	J2	90	97	99	102	97	95	92	85
	6.05	J3	89	96	98	100	96	95	91	85
	10.40	J4	97	105	100	99	93	92	89	84
3450	0.25	K1	93	99	101	104	101	99	96	92
	4.78	K2	92	99	101	104	99	97	94	88
	7.03	K3	90	98	100	102	98	96	93	87
	12.09	K4	98	106	103	100	96	93	91	86
3800	0.25	L1	95	101	104	106	104	101	98	94
	5.80	L2	93	101	104	105	103	99	97	91
	8.53	L3	92	100	103	104	101	98	96	90
	14.67	L4	100	108	107	103	99	95	94	89
4200	0.25	M1	97	103	106	108	107	103	101	97
	7.09	M2	95	102	106	107	106	101	100	94
	10.42	M3	94	101	105	106	104	100	99	93
	15.00	M4	99	106	109	106	104	98	97	92

BCS-182 SINGLE WIDTH

WHEEL DIAMETER: 18.25"
WHEEL CIRCUMFERENCE: 4.78'
OUTLET AREA: 1.829 SQ. FT.
OUTLET SIZE: 14½" X 18³⁄₁₆"
INLET DIAMETER: 19½" O.D.

MAX SPEEDS	CLASS 1	CLASS 2	CLASS 3
Up to 250°F	2339	3052	3808
251°F to 400°F*	2222	2899	3618
401°F to 700°F*	1918	2503	3123
Above 700°F	CONTACT FACTORY		

*Special hi-temp construction required
Tip Speed (fpm) = 4.78 x RPM
Max BHP = 0.426 x $(RPM/1000)^3$

		1.00" SP		1.50" SP		2.00" SP		2.50" SP		3.00" SP		3.50" SP	
CFM	OV	RPM	BHP	RPM	BHP	RPM	BHP	RPM	BHP	RPM	BHP	RPM	BHP
1280	700	907	0.29										
1463	800	925	0.32	1101	0.50								
1646	900	941	0.35	1118	0.55	1267	0.76						
1829	1000	966	0.38	1137	0.60	1284	0.82	1415	1.05				
2012	1100	1002	0.43	1152	0.64	1303	0.88	1433	1.13	1551	1.39		
2195	1200	1043	0.48	1176	0.69	1320	0.94	1451	1.21	1569	1.48	1678	1.76
2377	1300	1086	0.54	1210	0.75	1335	1.00	1470	1.29	1587	1.58	1695	1.87
2560	1400	1131	0.61	1248	0.83	1362	1.07	1485	1.36	1606	1.67	1713	1.98
2743	1500	1181	0.68	1290	0.91	1397	1.16	1504	1.44	1621	1.76	1732	2.09
2926	1600	1233	0.76	1334	1.00	1435	1.26	1533	1.53	1636	1.85	1748	2.20
3109	1700	1290	0.86	1379	1.10	1477	1.36	1570	1.65	1664	1.96	1763	2.30
3292	1800	1348	0.96	1428	1.21	1520	1.48	1609	1.77	1697	2.08	1787	2.42
3475	1900	1406	1.07	1479	1.33	1564	1.61	1651	1.90	1734	2.22	1816	2.55
3658	2000	1465	1.19	1532	1.46	1608	1.74	1693	2.05	1774	2.37	1853	2.71
3841	2100	1525	1.32	1590	1.60	1660	1.89	1737	2.21	1816	2.54	1891	2.88

		4.00" SP		4.50" SP		5.00" SP		5.50" SP		6.00" SP		6.50" SP		7.00" SP		7.50" SP		8.00" SP	
CFM	OV	RPM	BHP	RPM	BHP	RPM	BHP	RPM	BHP	RPM	BHP	RPM	BHP	RPM	BHP	RPM	BHP	RPM	BHP
2743	1500	1832	2.43	1926	2.77	2017	3.11	2102	3.46										
2926	1600	1851	2.55	1945	2.91	2034	3.27	2120	3.63	2202	4.01	2280	4.38						
3109	1700	1867	2.67	1964	3.05	2053	3.43	2137	3.81	2219	4.20	2297	4.59	2373	4.99	2446	5.39		
3292	1800	1882	2.79	1980	3.19	2071	3.59	2156	3.98	2237	4.39	2315	4.80	2390	5.21	2463	5.62	2534	6.05
3475	1900	1903	2.92	1995	3.31	2088	3.74	2175	4.16	2256	4.58	2333	5.00	2408	5.43	2481	5.86	2551	6.30
3658	2000	1931	3.07	2015	3.46	2103	3.88	2191	4.32	2274	4.77	2352	5.21	2427	5.65	2499	6.10	2569	6.56
3841	2100	1967	3.24	2043	3.62	2121	4.03	2206	4.48	2290	4.94	2370	5.42	2445	5.88	2517	6.34	2587	6.81
4024	2200	2005	3.43	2076	3.81	2149	4.22	2224	4.65	2305	5.11	2385	5.60	2463	6.10	2536	6.58	2606	7.06
4207	2300	2044	3.63	2114	4.02	2181	4.42	2252	4.85	2324	5.30	2400	5.78	2478	6.29	2553	6.81	2625	7.32
4390	2400	2086	3.85	2152	4.24	2219	4.65	2283	5.07	2352	5.52	2420	5.99	2493	6.49	2568	7.02	2640	7.55
4572	2500	2129	4.08	2194	4.48	2257	4.89	2321	5.32	2382	5.76	2448	6.23	2514	6.72	2583	7.23	2655	7.78
4755	2600	2173	4.32	2236	4.73	2298	5.15	2358	5.59	2420	6.03	2479	6.49	2542	6.98	2606	7.49	2670	8.01
4938	2700	2217	4.58	2279	5.00	2340	5.42	2399	5.86	2457	6.32	2516	6.79	2573	7.26	2634	7.76	2695	8.29
5121	2800	2262	4.85	2323	5.28	2382	5.71	2441	6.16	2497	6.62	2554	7.09	2610	7.58	2665	8.07	2723	8.59
5304	2900	2311	5.14	2368	5.58	2426	6.02	2483	6.47	2539	6.94	2593	7.42	2648	7.91	2703	8.41	2756	8.92
5487	3000	2362	5.45	2413	5.89	2471	6.34	2526	6.80	2581	7.27	2635	7.76	2687	8.25	2740	8.76	2793	9.28
5670	3100	2414	5.77	2464	6.22	2515	6.68	2571	7.15	2624	7.63	2677	8.12	2729	8.62	2779	9.13	2831	9.66
5853	3200	2467	6.11	2515	6.57	2562	7.03	2615	7.51	2668	8.00	2720	8.50	2771	9.00	2821	9.53	2869	10.05
6036	3300	2522	6.46	2567	6.93	2613	7.40	2660	7.89	2712	8.39	2764	8.90	2813	9.41	2863	9.94	2911	10.47
6219	3400	2579	6.84	2619	7.31	2665	7.80	2710	8.29	2757	8.79	2808	9.31	2857	9.83	2905	10.36	2953	10.91

		9.00" SP		10.00" SP		11.00" SP		12.00" SP		13.00" SP		14.00" SP		15.00" SP		16.00" SP		17.00" SP	
CFM	OV	RPM	BHP	RPM	BHP	RPM	BHP	RPM	BHP	RPM	BHP	RPM	BHP	RPM	BHP	RPM	BHP	RPM	BHP
4024	2200	2739	8.05	2866	9.05	2987	10.06	3103	11.09										
4207	2300	2757	8.33	2883	9.37	3004	10.41	3120	11.47	3231	12.55								
4390	2400	2776	8.62	2902	9.68	3022	10.77	3137	11.86	3248	12.96	3355	14.08	3459	15.22				
4572	2500	2794	8.90	2921	10.00	3041	11.11	3155	12.24	3266	13.38	3373	14.52	3476	15.69	3576	16.88		
4755	2600	2809	9.15	2939	10.33	3059	11.46	3174	12.62	3283	13.80	3390	14.98	3493	16.17	3593	17.38	3690	18.61
4938	2700	2823	9.41	2954	10.60	3078	11.82	3192	13.00	3302	14.20	3408	15.43	3510	16.65	3610	17.89	3707	19.14
5121	2800	2841	9.68	2969	10.89	3094	12.14	3211	13.39	3321	14.61	3426	15.86	3528	17.13	3628	18.40	3724	19.68
5304	2900	2869	10.01	2984	11.17	3109	12.44	3228	13.75	3340	15.03	3445	16.31	3547	17.60	3646	18.91	3742	20.23
5487	3000	2897	10.35	3008	11.52	3124	12.76	3243	14.08	3357	15.43	3464	16.76	3566	18.08	3664	19.41	3760	20.77
5670	3100	2932	10.74	3036	11.89	3142	13.10	3258	14.42	3372	15.80	3482	17.20	3584	18.56	3683	19.92	3778	21.30
5853	3200	2969	11.15	3065	12.28	3170	13.50	3273	14.77	3387	16.16	3496	17.59	3602	19.03	3702	20.44	3797	21.84
6036	3300	3007	11.58	3103	12.72	3198	13.92	3299	15.20	3402	16.54	3511	17.98	3617	19.45	3720	20.95		
6219	3400	3046	12.02	3140	13.19	3231	14.38	3327	15.65	3424	16.97	3526	18.38	3632	19.87	3735	21.39		
6402	3500	3088	12.50	3178	13.66	3269	14.88	3356	16.11	3452	17.45	3546	18.82	3647	20.30	3750	21.84		
6585	3600	3130	12.99	3217	14.17	3306	15.39	3393	16.64	3480	17.94	3574	19.34	3664	20.75	3765	22.30		

Performance shown is for installation type B & D - Free or ducted inlet, Ducted outlet. Underlined ratings indicate maximum static efficiency. Power rating (BHP) does not include drive losses. Performance ratings do not include the effects of appurtenances in the airstream. NOTE: Ratings shown apply also to model QBCS.

CLASS 1 | CLASS 2 | CLASS 3

BCS-182 SINGLE WIDTH

CONSTANT SPEED PERFORMANCE CURVES

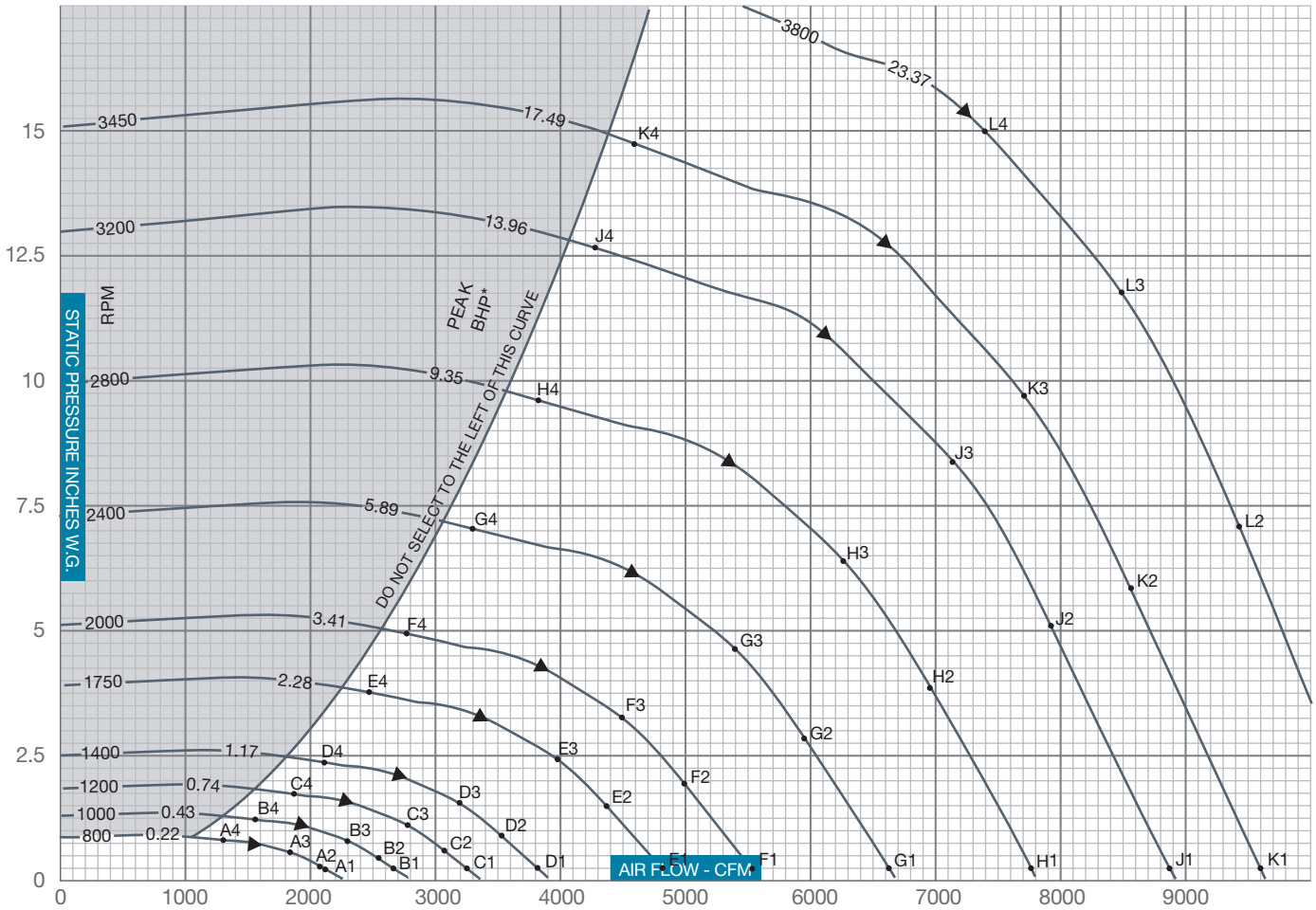

▲ PEAK STATIC EFFICIENCY
* Peak BHP does not include drive losses

$$\%\,\text{STATIC EFFICIENCY} = \frac{\text{CFM x SP x .0157}}{\text{BHP}}$$

$$\text{Outlet Velocity (OV) in feet per minute} = \frac{\text{CFM}}{\text{Outlet Area}}$$

SOUND POWER LEVELS x 10^{-12} WATT

The sound power level ratings shown are in decibels, referred to 10^{-12} watts calculated per AMCA Standard 301. Values shown are for inlet L_{wi} sound power levels for installation Type B, free inlet, ducted outlet. Ratings do not include the effects of duct end correction.

FAN RPM	FAN SP	SOUND POINT	BAND / FREQUENCY 1 / 63	2 / 125	3 / 250	4 / 500	5 / 1000	6 / 2000	7 / 4000	8 / 8000
800	0.25	A1	70	75	72	68	68	64	58	52
	0.31	A2	70	75	72	68	68	64	58	52
	0.52	A3	70	75	72	68	68	64	58	52
	0.79	A4	70	76	72	68	67	64	58	52
1000	0.25	B1	77	80	79	74	73	71	65	58
	0.49	B2	76	80	79	74	73	70	65	59
	0.82	B3	76	80	79	74	73	70	65	58
	1.24	B4	76	81	79	74	73	70	64	59
1200	0.25	C1	83	84	84	80	77	75	70	64
	0.71	C2	82	84	84	80	77	75	70	64
	1.18	C3	82	84	84	80	77	75	70	64
	1.79	C4	82	84	85	80	77	75	70	64
1400	0.25	D1	87	88	89	84	81	79	75	69
	0.96	D2	87	87	89	84	81	79	75	69
	1.60	D3	87	87	89	84	80	79	75	69
	2.43	D4	87	87	90	84	80	79	75	69
1750	0.25	E1	94	93	95	91	86	85	82	76
	1.50	E2	94	92	96	91	86	85	82	76
	2.50	E3	94	92	96	91	85	85	82	76
	3.80	E4	94	91	96	91	85	85	81	76
2000	0.25	F1	96	97	98	95	90	88	86	80
	1.96	F2	97	96	98	95	89	88	85	80
	3.27	F3	97	96	98	95	89	88	85	80
	4.96	F4	97	96	99	95	89	88	85	80

FAN RPM	FAN SP	SOUND POINT	BAND / FREQUENCY 1 / 63	2 / 125	3 / 250	4 / 500	5 / 1000	6 / 2000	7 / 4000	8 / 8000
2400	0.25	G1	99	102	102	101	95	92	90	85
	2.82	G2	100	102	102	101	95	92	90	85
	4.70	G3	100	102	102	101	95	92	90	85
	7.15	G4	100	102	102	101	95	92	90	85
2800	0.25	H1	102	107	106	105	100	96	95	90
	3.84	H2	103	107	105	106	100	96	94	90
	6.40	H3	103	107	105	106	100	96	94	90
	9.73	H4	102	107	105	106	99	95	94	90
3200	0.25	J1	104	111	109	109	104	99	98	94
	5.02	J2	105	111	108	110	104	99	98	94
	8.36	J3	105	111	108	110	104	99	98	94
	12.71	J4	105	111	108	110	103	98	98	94
3450	0.25	K1	106	113	111	111	106	100	100	97
	5.83	K2	106	114	109	112	106	100	100	96
	9.72	K3	106	114	109	112	106	100	100	96
	14.77	K4	106	113	109	112	106	100	100	96
3800	0.25	L1	107	115	114	113	109	103	102	99
	7.07	L2	108	115	112	114	109	103	102	99
	11.79	L3	108	115	112	114	109	103	102	99
	15.00	L4	108	115	112	114	109	103	102	99

BCS-200 SINGLE WIDTH

WHEEL DIAMETER: 20.00"
WHEEL CIRCUMFERENCE: 5.24'
OUTLET AREA: 2.196 SQ. FT.
OUTLET SIZE: 15⅞" X 19¹⁵⁄₁₆"
INLET DIAMETER: 21½" O.D.

MAX SPEEDS	CLASS 1	CLASS 2	CLASS 3
Up to 250°F	2134	2785	3475
251°F to 400°F*	2027	2646	3301
401°F to 700°F*	1750	2284	2850
Above 700°F	CONTACT FACTORY		

*Special hi-temp construction required
Tip Speed (fpm) = 5.24 x RPM
Max BHP = 0.674 x $(RPM/1000)^3$

		1.00" SP		1.50" SP		2.00" SP		2.50" SP		3.00" SP		3.50" SP	
CFM	OV	RPM	BHP	RPM	BHP	RPM	BHP	RPM	BHP	RPM	BHP	RPM	BHP
1537	700	828	0.35										
1757	800	844	0.38	1004	0.60								
1977	900	859	0.42	1021	0.66	1156	0.91						
2196	1000	881	0.46	1038	0.72	1172	0.98	1292	1.26				
2416	1100	915	0.52	1052	0.77	1189	1.06	1307	1.36	1416	1.67		
2636	1200	952	0.58	1073	0.83	1205	1.13	1324	1.45	1431	1.78	1531	2.11
2855	1300	991	0.65	1104	0.91	1218	1.20	1341	1.55	1448	1.89	1547	2.25
3075	1400	1032	0.73	1139	0.99	1243	1.29	1355	1.63	1465	2.01	1563	2.38
3295	1500	1078	0.82	1178	1.09	1274	1.39	1373	1.73	1479	2.11	1580	2.52
3514	1600	1125	0.92	1217	1.20	1309	1.51	1399	1.84	1493	2.22	1595	2.64
3734	1700	1177	1.03	1258	1.32	1347	1.64	1433	1.98	1518	2.35	1609	2.76
3954	1800	1230	1.15	1303	1.45	1387	1.78	1468	2.13	1548	2.50	1630	2.90
4173	1900	1283	1.28	1350	1.59	1427	1.93	1506	2.29	1582	2.67	1657	3.07
4393	2000	1337	1.43	1398	1.75	1468	2.09	1545	2.46	1619	2.85	1691	3.26
4613	2100	1391	1.58	1451	1.92	1514	2.27	1585	2.65	1657	3.04	1726	3.46

		4.00" SP		4.50" SP		5.00" SP		5.50" SP		6.00" SP		6.50" SP		7.00" SP		7.50" SP		8.00" SP	
CFM	OV	RPM	BHP	RPM	BHP	RPM	BHP	RPM	BHP	RPM	BHP	RPM	BHP	RPM	BHP	RPM	BHP	RPM	BHP
3295	1500	1672	2.91	1758	3.32	1840	3.73	1918	4.16										
3514	1600	1689	3.07	1775	3.49	1856	3.93	1934	4.37	2009	4.81	2081	5.26						
3734	1700	1704	3.21	1792	3.67	1873	4.12	1950	4.58	2025	5.04	2096	5.51	2165	5.99	2232	6.47		
3954	1800	1718	3.35	1807	3.83	1890	4.31	1967	4.78	2041	5.27	2112	5.76	2181	6.25	2248	6.75	2312	7.26
4173	1900	1737	3.50	1821	3.98	1905	4.49	1985	5.00	2058	5.50	2129	6.01	2197	6.53	2264	7.04	2328	7.57
4393	2000	1762	3.68	1838	4.15	1919	4.66	1999	5.19	2075	5.73	2146	6.26	2214	6.79	2280	7.33	2344	7.88
4613	2100	1795	3.89	1864	4.35	1936	4.84	2013	5.38	2089	5.94	2163	6.51	2231	7.06	2297	7.61	2361	8.18
4833	2200	1829	4.12	1894	4.58	1961	5.07	2030	5.58	2103	6.14	2177	6.72	2247	7.32	2314	7.90	2378	8.48
5052	2300	1866	4.36	1929	4.83	1990	5.31	2055	5.83	2120	6.37	2190	6.95	2261	7.56	2329	8.18	2395	8.80
5272	2400	1904	4.62	1964	5.09	2025	5.59	2083	6.09	2146	6.63	2209	7.19	2275	7.79	2343	8.43	2409	9.07
5492	2500	1943	4.90	2002	5.38	2059	5.88	2118	6.39	2174	6.92	2234	7.48	2294	8.07	2357	8.69	2423	9.34
5711	2600	1983	5.19	2040	5.68	2097	6.19	2152	6.71	2208	7.25	2262	7.80	2320	8.38	2378	8.99	2437	9.62
5931	2700	2023	5.50	2080	6.00	2135	6.51	2189	7.04	2242	7.59	2296	8.15	2348	8.72	2403	9.33	2460	9.96
6151	2800	2064	5.83	2120	6.34	2174	6.86	2227	7.40	2278	7.95	2330	8.52	2382	9.10	2432	9.69	2485	10.31
6370	2900	2109	6.18	2161	6.70	2214	7.23	2266	7.77	2317	8.33	2366	8.91	2416	9.50	2466	10.10	2515	10.71
6590	3000	2156	6.54	2201	7.07	2254	7.62	2305	8.17	2355	8.73	2404	9.32	2452	9.91	2501	10.52	2549	11.15
6810	3100	2203	6.93	2248	7.47	2295	8.02	2346	8.59	2395	9.16	2443	9.75	2490	10.35	2536	10.97	2583	11.60
7029	3200	2251	7.33	2295	7.88	2338	8.44	2386	9.02	2435	9.61	2482	10.20	2528	10.81	2574	11.44	2618	12.07
7249	3300	2301	7.76	2342	8.32	2385	8.89	2427	9.47	2475	10.08	2522	10.68	2567	11.30	2612	11.93	2656	12.58
7469	3400	2353	8.22	2390	8.78	2432	9.36	2472	9.95	2516	10.56	2562	11.18	2607	11.81	2651	12.44	2695	13.10

		9.00" SP		10.00" SP		11.00" SP		12.00" SP		13.00" SP		14.00" SP		15.00" SP		16.00" SP		17.00" SP	
CFM	OV	RPM	BHP	RPM	BHP	RPM	BHP	RPM	BHP	RPM	BHP	RPM	BHP	RPM	BHP	RPM	BHP	RPM	BHP
4833	2200	2499	9.67	2615	10.87	2725	12.08	2831	13.32										
5052	2300	2516	10.01	2631	11.25	2741	12.51	2847	13.78	2948	15.07								
5272	2400	2533	10.36	2648	11.63	2757	12.93	2863	14.24	2964	15.56	3062	16.91	3156	18.28				
5492	2500	2549	10.69	2665	12.01	2774	13.34	2879	14.70	2980	16.07	3077	17.44	3172	18.85	3263	20.27		
5711	2600	2563	10.99	2682	12.40	2792	13.76	2896	15.15	2996	16.57	3093	17.98	3187	19.42	3279	20.87	3367	22.35
5931	2700	2576	11.30	2696	12.73	2809	14.19	2913	15.61	3013	17.05	3110	18.53	3203	20.00	3294	21.48	3383	22.99
6151	2800	2593	11.63	2709	13.07	2823	14.57	2930	16.08	3030	17.55	3127	19.05	3220	20.57	3310	22.10	3398	23.64
6370	2900	2618	12.02	2723	13.42	2837	14.95	2945	16.51	3047	18.06	3144	19.58	3237	21.14	3327	22.71	3414	24.30
6590	3000	2644	12.43	2745	13.83	2850	15.32	2959	16.91	3063	18.53	3161	20.13	3254	21.71	3344	23.31	3431	24.95
6810	3100	2675	12.90	2771	14.28	2867	15.73	2973	17.32	3077	18.97	3177	20.65	3271	22.29	3361	23.92	3448	25.58
7029	3200	2710	13.39	2797	14.74	2893	16.22	2986	17.74	3090	19.41	3190	21.12	3287	22.86	3378	24.55	3465	26.23
7249	3300	2744	13.91	2831	15.28	2918	16.71	3011	18.25	3104	19.86	3204	21.59	3301	23.36	3394	25.16		
7469	3400	2779	14.44	2865	15.84	2948	17.27	3036	18.79	3125	20.38	3218	22.08	3314	23.87	3408	25.69		
7688	3500	2817	15.01	2900	16.41	2983	17.87	3062	19.34	3150	20.96	3236	22.61	3328	24.38	3422	26.23		
7908	3600	2856	15.60	2936	17.01	3017	18.48	3096	19.99	3176	21.55	3261	23.22	3343	24.92	3435	26.78		

Performance shown is for installation type B & D - Free or ducted inlet, Ducted outlet. Underlined ratings indicate maximum static efficiency. Power rating (BHP) does not include drive losses. Performance ratings do not include the effects of appurtenances in the airstream. NOTE: Ratings shown apply also to model QBCS.

CLASS 1 | CLASS 2 | CLASS 3

BCS-200 SINGLE WIDTH

CONSTANT SPEED PERFORMANCE CURVES

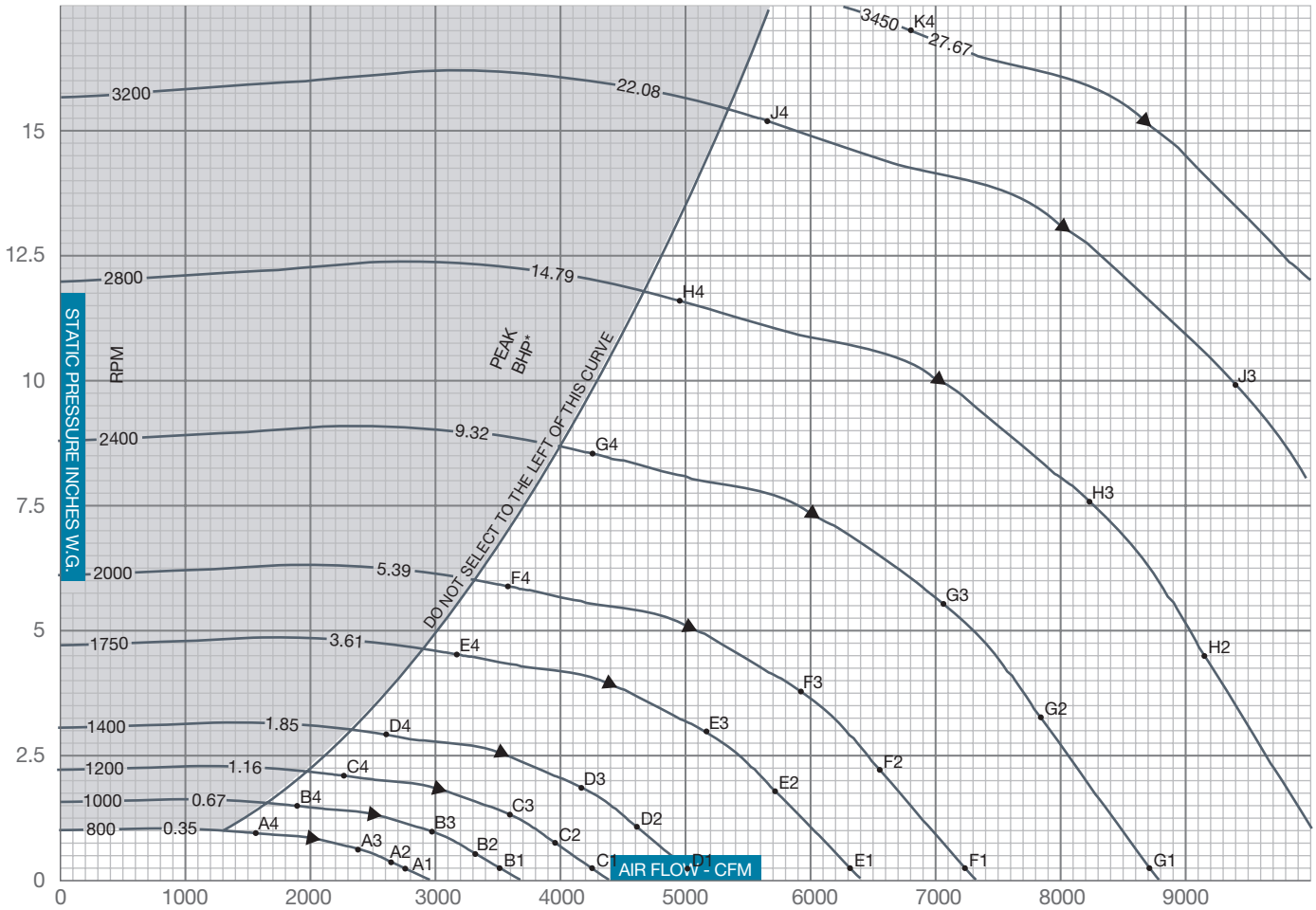

▲ PEAK STATIC EFFICIENCY
* Peak BHP does not include drive losses

$$\% \text{ STATIC EFFICIENCY} = \frac{\text{CFM x SP x .0157}}{\text{BHP}}$$

$$\text{Outlet Velocity (OV) in feet per minute} = \frac{\text{CFM}}{\text{Outlet Area}}$$

SOUND POWER LEVELS x 10^{-12} WATT

The sound power level ratings shown are in decibels, referred to 10^{-12} watts calculated per AMCA Standard 301. Values shown are for inlet L_{wi} sound power levels for installation Type B, free inlet, ducted outlet. Ratings do not include the effects of duct end correction.

FAN RPM	FAN SP	SOUND POINT	BAND / FREQUENCY 1 / 63	2 / 125	3 / 250	4 / 500	5 / 1000	6 / 2000	7 / 4000	8 / 8000
800	0.25	A1	74	79	75	71	70	67	61	54
	0.38	A2	74	79	75	71	70	67	61	54
	0.63	A3	74	79	75	71	70	67	60	54
	0.95	A4	74	79	75	71	70	66	61	55
1000	0.25	B1	81	83	82	77	76	73	67	61
	0.59	B2	80	84	82	77	76	73	67	61
	0.98	B3	80	84	82	77	76	73	67	61
	1.49	B4	79	84	82	77	76	73	67	61
1200	0.25	C1	86	88	87	83	80	78	73	67
	0.85	C2	86	87	88	83	80	78	73	67
	1.41	C3	86	87	88	83	80	78	73	67
	2.15	C4	85	87	88	82	80	78	73	67
1400	0.25	D1	91	91	92	87	83	82	78	71
	1.15	D2	91	91	92	87	83	82	78	72
	1.92	D3	91	91	92	87	83	82	78	71
	2.92	D4	90	90	93	87	83	82	77	72
1750	0.25	E1	97	97	98	94	88	88	85	78
	1.80	E2	98	95	99	94	88	88	84	78
	3.00	E3	98	95	99	94	88	88	84	78
	4.56	E4	98	95	99	94	88	88	84	78

FAN RPM	FAN SP	SOUND POINT	BAND / FREQUENCY 1 / 63	2 / 125	3 / 250	4 / 500	5 / 1000	6 / 2000	7 / 4000	8 / 8000
2000	0.25	F1	100	100	101	98	92	91	88	83
	2.35	F2	100	99	101	98	92	91	88	82
	3.92	F3	100	99	101	98	92	91	88	82
	5.96	F4	100	99	102	98	92	91	88	82
2400	0.25	G1	103	106	105	104	98	95	93	88
	3.39	G2	103	105	105	104	98	95	93	88
	5.65	G3	103	105	105	104	98	95	93	88
	8.58	G4	103	105	105	104	97	95	93	88
2800	0.25	H1	105	110	109	108	102	99	97	93
	4.61	H2	106	110	108	109	102	98	97	93
	7.69	H3	106	110	108	109	102	98	97	93
	11.68	H4	106	110	108	109	102	98	97	92
3200	0.25	J1	108	114	112	112	106	102	101	97
	6.02	J2	108	114	111	113	106	101	101	97
	10.04	J3	108	114	111	113	106	101	101	97
	15.26	J4	108	114	111	113	106	101	100	97
3450	0.25	K1	109	116	114	114	109	103	103	99
	7.00	K2	110	117	113	115	109	103	103	99
	11.67	K3	110	117	113	115	109	103	103	99
	17.00	K4	110	117	112	115	108	103	102	99

BCS-222 SINGLE WIDTH

WHEEL DIAMETER: 22.25"
WHEEL CIRCUMFERENCE: 5.83'
OUTLET AREA: 2.723 SQ. FT.
OUTLET SIZE: 17 11/16" X 22 3/16"
INLET DIAMETER: 23½" O.D.

MAX SPEEDS	CLASS 1	CLASS 2	CLASS 3
Up to 250°F	1885	2460	3303
251°F to 400°F*	1791	2337	3138
401°F to 700°F*	1546	2017	2708
Above 700°F	CONTACT FACTORY		

*Special hi-temp construction required
Tip Speed (fpm) = 5.83 x RPM
Max BHP = 1.137 x $(RPM/1000)^3$

		0.25" SP		0.50" SP		0.75" SP		1.00" SP		1.50" SP		2.00" SP		2.50" SP		3.00" SP		3.50" SP	
CFM	OV	RPM	BHP	RPM	BHP	RPM	BHP	RPM	BHP	RPM	BHP	RPM	BHP	RPM	BHP	RPM	BHP	RPM	BHP
1905	700	464	0.11	560	0.20	654	0.30	741	0.42										
2178	800	505	0.14	590	0.23	673	0.33	754	0.45	901	0.73								
2450	900	547	0.17	623	0.27	698	0.38	771	0.50	913	0.79								
2722	1000	591	0.21	660	0.32	729	0.44	795	0.56	926	0.85	1049	1.19						
2994	1100	636	0.25	701	0.37	763	0.50	824	0.64	944	0.92	1061	1.26	1171	1.64				
3267	1200	684	0.30	742	0.44	799	0.57	856	0.71	967	1.01	1077	1.35	1183	1.74	1282	2.15		
3539	1300	731	0.36	785	0.50	839	0.65	891	0.80	995	1.12	1097	1.45	1197	1.84	1294	2.26	1385	2.71
3811	1400	779	0.43	829	0.58	880	0.73	928	0.90	1026	1.22	1121	1.57	1214	1.96	1308	2.38	1397	2.85
4083	1500	828	0.50	874	0.66	922	0.83	968	1.00	1059	1.34	1148	1.72	1237	2.09	1325	2.52	1410	2.98
4356	1600	876	0.59	921	0.76	965	0.93	1009	1.11	1094	1.48	1179	1.86	1262	2.25	1345	2.68	1427	3.15
4628	1700	925	0.68	968	0.86	1009	1.05	1051	1.23	1131	1.62	1211	2.01	1290	2.44	1369	2.85	1447	3.32
4900	1800	975	0.79	1016	0.98	1054	1.17	1094	1.37	1170	1.78	1247	2.19	1322	2.62	1396	3.07	1469	3.51
5172	1900	1024	0.91	1063	1.10	1100	1.31	1138	1.51	1211	1.94	1282	2.38	1354	2.81	1425	3.29	1496	3.75
5445	2000	1074	1.04	1112	1.24	1147	1.45	1182	1.67	1253	2.11	1321	2.57	1389	3.03	1457	3.51	1523	4.01
5717	2100	1124	1.18	1160	1.39	1194	1.61	1227	1.84	1295	2.30	1360	2.78	1425	3.27	1490	3.74	1555	4.26

		4.00" SP		4.50" SP		5.00" SP		5.50" SP		6.00" SP		6.50" SP		7.00" SP		7.50" SP		8.00" SP	
CFM	OV	RPM	BHP	RPM	BHP	RPM	BHP	RPM	BHP	RPM	BHP	RPM	BHP	RPM	BHP	RPM	BHP	RPM	BHP
4083	1500	1494	3.49	1573	4.00	1649	4.52												
4356	1600	1507	3.64	1586	4.17	1661	4.72	1733	5.27	1801	5.84								
4628	1700	1524	3.82	1599	4.35	1673	4.91	1745	5.50	1813	6.08	1879	6.67						
4900	1800	1542	4.02	1616	4.56	1687	5.11	1757	5.70	1825	6.32	1891	6.94	1954	7.56	2015	8.19		
5172	1900	1565	4.24	1634	4.78	1704	5.34	1771	5.93	1838	6.54	1903	7.19	1966	7.85	2027	8.49	2086	9.16
5445	2000	1590	4.49	1657	5.02	1722	5.59	1788	6.18	1853	6.80	1916	7.43	1978	8.11	2039	8.80	2098	9.48
5717	2100	1618	4.79	1681	5.29	1744	5.86	1806	6.45	1870	7.08	1931	7.72	1991	8.37	2052	9.08	2110	9.79
5989	2200	1648	5.08	1708	5.62	1768	6.15	1829	6.75	1888	7.37	1948	8.02	2008	8.69	2065	9.37	2123	10.09
6262	2300	1680	5.37	1737	5.96	1796	6.51	1853	7.07	1911	7.70	1967	8.35	2025	9.02	2082	9.72	2138	10.43
6534	2400	1712	5.68	1769	6.28	1823	6.89	1880	7.47	1934	8.04	1990	8.70	2045	9.38	2099	10.08	2155	10.80
6806	2500	1747	6.03	1801	6.62	1855	7.25	1907	7.88	1962	8.48	2014	9.08	2067	9.76	2120	10.46	2172	11.18
7078	2600	1782	6.40	1835	6.99	1887	7.62	1939	8.27	1989	8.93	2041	9.55	2091	10.18	2143	10.87	2194	11.60
7351	2700	1818	6.78	1870	7.39	1920	8.01	1970	8.68	2020	9.36	2069	10.03	2119	10.68	2167	11.33	2216	12.04
7623	2800	1857	7.16	1905	7.81	1955	8.45	2003	9.10	2052	9.80	2099	10.50	2146	11.20	2195	11.87	2241	12.55
7895	2900	1896	7.57	1943	8.24	1990	8.91	2037	9.57	2084	10.25	2131	10.98	2177	11.71	2222	12.43	2269	13.13
8167	3000	1936	7.99	1981	8.68	2026	9.38	2072	10.06	2118	10.75	2163	11.47	2208	12.22	2252	12.98	2296	13.73
8440	3100	1977	8.43	2020	9.14	2064	9.86	2108	10.58	2153	11.28	2196	11.99	2240	12.74	2284	13.52	2327	14.31
8712	3200	2018	8.89	2061	9.62	2103	10.36	2145	11.10	2188	11.84	2231	12.57	2273	13.30	2316	14.08	2358	14.88
8984	3300	2060	9.37	2102	10.12	2142	10.88	2184	11.64	2224	12.41	2267	13.16	2308	13.91	2349	14.67	2390	15.48
9256	3400	2102	9.88	2143	10.64	2183	11.42	2223	12.20	2263	12.99	2302	13.78	2344	14.55	2384	15.32	2423	16.11

		9.00" SP		10.00" SP		11.00" SP		12.00" SP		13.00" SP		14.00" SP		15.00" SP		16.00" SP		17.00" SP	
CFM	OV	RPM	BHP	RPM	BHP	RPM	BHP	RPM	BHP	RPM	BHP	RPM	BHP	RPM	BHP	RPM	BHP	RPM	BHP
5989	2200	2235	11.60	2341	13.10	2443	14.64												
6262	2300	2247	11.93	2353	13.51	2455	15.08	2552	16.69										
6534	2400	2261	12.28	2366	13.88	2467	15.54	2564	17.18	2656	18.85								
6806	2500	2278	12.69	2379	14.26	2479	15.95	2576	17.67	2668	19.38	2758	21.12	2844	22.90				
7078	2600	2295	13.12	2395	14.70	2492	16.36	2588	18.12	2681	19.91	2770	21.69	2856	23.50	2940	25.34		
7351	2700	2314	13.57	2412	15.17	2507	16.83	2601	18.57	2693	20.40	2782	22.27	2868	24.11	2952	25.98	3032	27.89
7623	2800	2336	14.05	2429	15.65	2524	17.34	2615	19.06	2706	20.89	2794	22.79	2880	24.73	2964	26.63	3044	28.57
7895	2900	2359	14.55	2451	16.18	2541	17.86	2632	19.62	2720	21.41	2807	23.31	2893	25.28	2976	27.29	3056	29.26
8167	3000	2386	15.17	2474	16.73	2561	18.42	2649	20.19	2737	22.01	2821	23.87	2905	25.84	2988	27.88	3069	29.96
8440	3100	2413	15.83	2498	17.32	2584	19.02	2668	20.78	2754	22.62	2838	24.51	2919	26.43	3001	28.48	3081	30.58
8712	3200	2441	16.51	2525	18.04	2607	19.63	2690	21.42	2771	23.25	2855	25.17	2936	27.12	3014	29.11	3094	31.22
8984	3300	2472	17.15	2552	18.78	2633	20.36	2713	22.08	2793	23.94	2872	25.84	2953	27.83	3031	29.84	3107	31.89
9256	3400	2503	17.80	2581	19.53	2660	21.16	2737	22.80	2816	24.65	2893	26.57	2970	28.54	3048	30.59	3124	32.67
9529	3500	2535	18.48	2612	20.24	2688	21.99	2764	23.66	2839	25.37	2916	27.33	2990	29.31	3065	31.36	3141	33.47
9801	3600	2568	19.17	2644	20.97	2717	22.79	2792	24.55	2866	26.28	2939	28.10	3013	30.12	3085	32.16	3158	34.28

Performance shown is for installation type B & D - Free or ducted inlet, Ducted outlet. Underlined ratings indicate maximum static efficiency. Power rating (BHP) does not include drive losses. Performance ratings do not include the effects of appurtenances in the airstream. NOTE: Ratings shown apply also to model QBCS.

CLASS 1 | CLASS 2 | CLASS 3

BCS-222 SINGLE WIDTH

CONSTANT SPEED PERFORMANCE CURVES

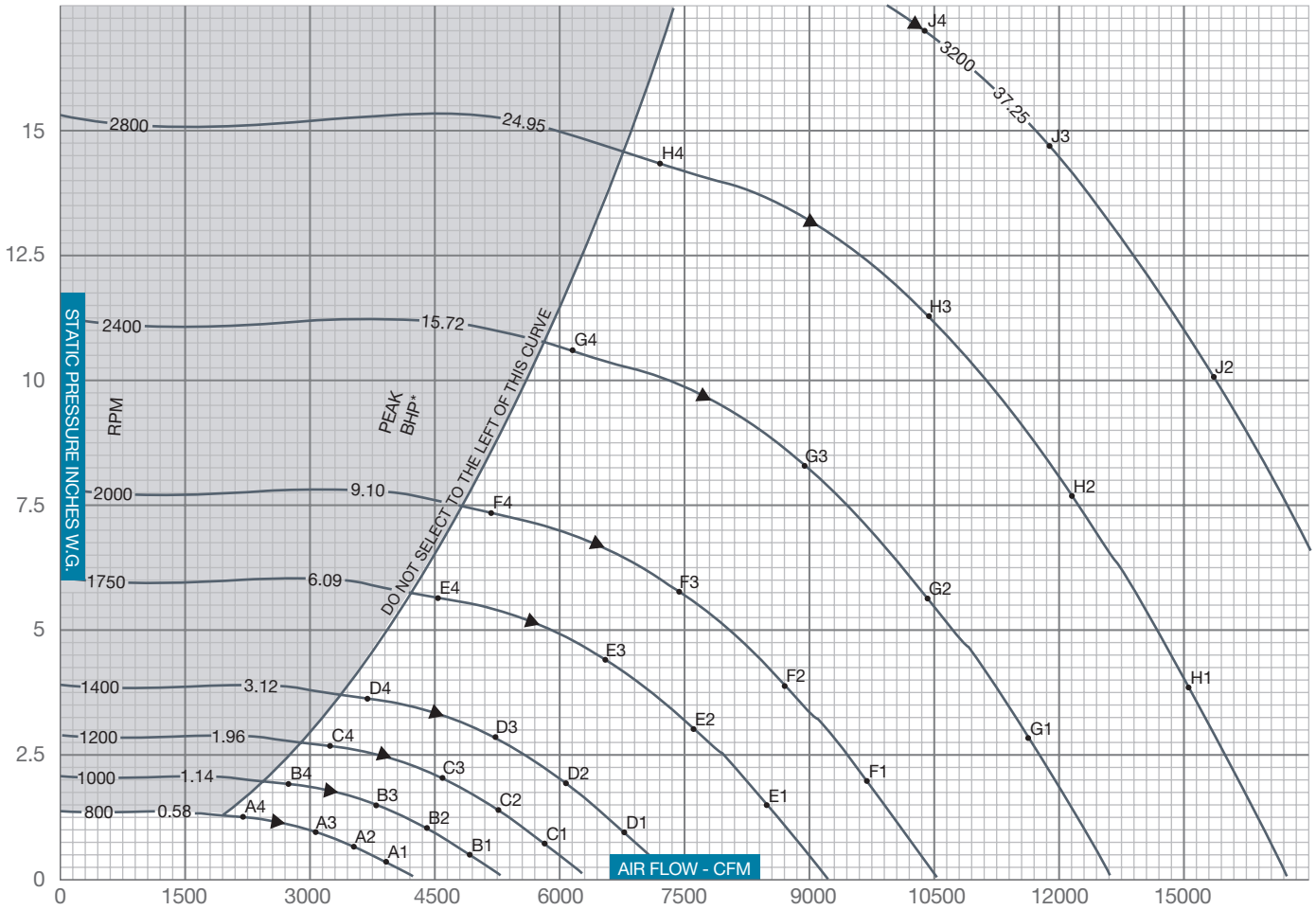

▲ PEAK STATIC EFFICIENCY
* Peak BHP does not include drive losses

$$\% \text{ STATIC EFFICIENCY} = \frac{\text{CFM x SP x .0157}}{\text{BHP}}$$

$$\text{Outlet Velocity (OV) in feet per minute} = \frac{\text{CFM}}{\text{Outlet Area}}$$

SOUND POWER LEVELS x 10^{-12} WATT

The sound power level ratings shown are in decibels, referred to 10^{-12} watts calculated per AMCA Standard 301. Values shown are for inlet L_{wi} sound power levels for installation Type B, free inlet, ducted outlet. Ratings do not include the effects of duct end correction.

FAN RPM	FAN SP	SOUND POINT	BAND / FREQUENCY 1 / 63	2 / 125	3 / 250	4 / 500	5 / 1000	6 / 2000	7 / 4000	8 / 8000
800	0.31	A1	69	72	69	67	64	64	52	40
	0.63	A2	70	71	67	65	62	59	52	45
	0.92	A3	70	71	66	64	62	59	53	47
	1.17	A4	77	78	72	69	68	63	57	51
1000	0.49	B1	76	78	75	73	70	71	61	49
	0.98	B2	76	76	73	71	68	66	59	52
	1.44	B3	76	76	73	70	67	65	60	54
	1.83	B4	84	84	79	75	73	70	64	58
1200	0.71	C1	82	82	81	78	75	74	68	56
	1.41	C2	82	81	79	76	73	70	65	58
	2.07	C3	82	81	79	74	72	70	65	59
	2.63	C4	91	89	85	80	78	75	70	63
1400	0.96	D1	87	85	86	81	79	77	74	62
	1.92	D2	86	85	84	79	77	74	70	63
	2.82	D3	86	85	84	79	76	73	70	64
	3.58	D4	96	93	91	85	81	79	74	68
1750	1.50	E1	95	91	92	87	85	81	83	71
	3.00	E2	93	91	90	85	83	79	77	70
	4.40	E3	93	91	90	84	81	79	77	71
	5.60	E4	103	99	97	91	86	86	81	75

FAN RPM	FAN SP	SOUND POINT	BAND / FREQUENCY 1 / 63	2 / 125	3 / 250	4 / 500	5 / 1000	6 / 2000	7 / 4000	8 / 8000
2000	1.96	F1	97	95	95	91	88	85	86	76
	3.92	F2	96	95	94	89	86	83	81	74
	5.75	F3	95	95	94	89	85	82	80	75
	7.31	F4	106	104	101	95	90	89	85	79
2400	2.82	G1	100	101	99	97	93	90	89	83
	5.64	G2	99	101	99	95	91	88	85	80
	8.28	G3	99	101	99	95	90	87	85	80
	10.53	G4	109	110	106	101	95	93	90	85
2800	3.84	H1	103	106	103	102	97	94	92	89
	7.68	H2	102	106	103	100	95	92	89	85
	11.26	H3	101	106	103	100	94	91	88	85
	14.34	H4	111	115	110	107	100	96	94	89
3200	5.02	J1	105	111	106	106	100	97	95	95
	10.03	J2	104	110	106	104	98	95	92	90
	14.71	J3	104	110	106	104	97	94	92	89
	17.00	J4	108	114	109	108	100	97	95	92

BCS-245 SINGLE WIDTH

WHEEL DIAMETER: 24.50"
WHEEL CIRCUMFERENCE: 6.41'
OUTLET AREA: 3.304 SQ. FT.
OUTLET SIZE: 19 7/16" X 24 1/2"
INLET DIAMETER: 26 1/2" O.D.

MAX SPEEDS	CLASS 1	CLASS 2	CLASS 3
Up to 250°F	1712	2234	3000
251°F to 400°F*	1626	2122	2850
401°F to 700°F*	1404	1832	2460
Above 700°F	CONTACT FACTORY		

*Special hi-temp construction required
Tip Speed (fpm) = 6.41 x RPM
Max BHP = 1.840 x $(RPM/1000)^3$

		0.25" SP		0.50" SP		0.75" SP		1.00" SP		1.50" SP		2.00" SP		2.50" SP		3.00" SP		3.50" SP	
CFM	OV	RPM	BHP	RPM	BHP	RPM	BHP	RPM	BHP	RPM	BHP	RPM	BHP	RPM	BHP	RPM	BHP	RPM	BHP
2310	700	422	0.14	509	0.24	594	0.36	673	0.50										
2640	800	458	0.17	535	0.28	611	0.41	684	0.55	818	0.88								
2970	900	497	0.21	566	0.33	634	0.47	700	0.61	829	0.96								
3301	1000	537	0.25	600	0.39	662	0.53	722	0.68	841	1.03	953	1.44						
3631	1100	578	0.31	636	0.45	693	0.61	748	0.77	857	1.12	964	1.53	1063	1.99				
3961	1200	621	0.37	674	0.53	726	0.69	777	0.86	878	1.22	978	1.64	1074	2.10	1164	2.60		
4291	1300	664	0.44	713	0.61	762	0.79	809	0.97	903	1.35	996	1.76	1087	2.23	1175	2.75	1258	3.29
4621	1400	708	0.52	753	0.70	799	0.89	843	1.09	932	1.48	1018	1.90	1103	2.37	1188	2.89	1269	3.45
4951	1500	752	0.61	794	0.81	837	1.01	879	1.21	962	1.63	1043	2.08	1123	2.54	1203	3.06	1281	3.62
5281	1600	796	0.71	836	0.92	876	1.13	916	1.35	994	1.79	1071	2.26	1147	2.73	1222	3.25	1296	3.81
5611	1700	840	0.83	879	1.05	917	1.27	954	1.50	1028	1.97	1100	2.44	1172	2.96	1243	3.46	1314	4.03
5941	1800	885	0.96	922	1.18	957	1.42	993	1.66	1063	2.15	1132	2.66	1201	3.18	1268	3.72	1334	4.26
6272	1900	930	1.10	966	1.34	999	1.58	1033	1.83	1100	2.35	1164	2.88	1230	3.41	1294	3.99	1358	4.55
6602	2000	975	1.26	1010	1.51	1042	1.76	1073	2.03	1138	2.56	1200	3.12	1262	3.68	1323	4.25	1383	4.87
6932	2100	1021	1.43	1054	1.69	1084	1.96	1114	2.23	1176	2.79	1235	3.37	1294	3.96	1353	4.54	1412	5.17

		4.00" SP		4.50" SP		5.00" SP		5.50" SP		6.00" SP		6.50" SP		7.00" SP		7.50" SP		8.00" SP	
CFM	OV	RPM	BHP	RPM	BHP	RPM	BHP	RPM	BHP	RPM	BHP	RPM	BHP	RPM	BHP	RPM	BHP	RPM	BHP
4951	1500	1357	4.23	1429	4.85	1497	5.48												
5281	1600	1369	4.41	1440	5.06	1508	5.73	1573	6.39	1636	7.08								
5611	1700	1384	4.64	1452	5.27	1520	5.96	1584	6.67	1647	7.37	1706	8.09						
5941	1800	1401	4.87	1468	5.52	1532	6.20	1596	6.92	1658	7.66	1717	8.41	1775	9.16	1830	9.93		
6272	1900	1421	5.14	1484	5.79	1547	6.48	1609	7.19	1669	7.93	1728	8.72	1785	9.51	1841	10.30	1894	11.10
6602	2000	1444	5.45	1505	6.08	1564	6.77	1624	7.50	1682	8.24	1740	9.01	1797	9.83	1852	10.67	1905	11.50
6932	2100	1469	5.81	1527	6.42	1584	7.10	1640	7.82	1698	8.58	1754	9.36	1808	10.15	1863	11.01	1917	11.88
7262	2200	1496	6.16	1552	6.82	1606	7.46	1661	8.18	1715	8.94	1770	9.73	1823	10.54	1876	11.36	1928	12.24
7592	2300	1525	6.51	1578	7.22	1631	7.90	1682	8.57	1735	9.33	1787	10.12	1839	10.94	1891	11.78	1941	12.64
7922	2400	1555	6.89	1606	7.61	1656	8.35	1707	9.05	1757	9.75	1807	10.55	1857	11.37	1906	12.22	1957	13.10
8252	2500	1586	7.31	1635	8.02	1685	8.78	1732	9.55	1781	10.28	1829	11.01	1878	11.83	1925	12.69	1972	13.56
8582	2600	1618	7.75	1666	8.47	1714	9.24	1761	10.03	1806	10.82	1854	11.58	1899	12.34	1946	13.18	1992	14.07
8912	2700	1651	8.22	1698	8.96	1743	9.71	1789	10.52	1834	11.35	1879	12.17	1924	12.95	1968	13.74	2013	14.60
9243	2800	1686	8.68	1730	9.47	1775	10.24	1819	11.03	1863	11.88	1906	12.73	1949	13.58	1993	14.40	2036	15.21
9573	2900	1722	9.18	1764	9.99	1807	10.80	1850	11.60	1892	12.43	1935	13.31	1977	14.20	2018	15.08	2060	15.92
9903	3000	1758	9.69	1799	10.53	1840	11.38	1882	12.20	1923	13.03	1964	13.90	2005	14.81	2045	15.73	2085	16.65
10233	3100	1795	10.22	1835	11.09	1875	11.96	1914	12.83	1955	13.68	1995	14.54	2035	15.45	2074	16.39	2113	17.34
10563	3200	1833	10.78	1871	11.67	1910	12.56	1948	13.46	1987	14.35	2026	15.24	2064	16.13	2103	17.08	2142	18.05
10893	3300	1871	11.36	1909	12.27	1946	13.19	1983	14.11	2020	15.05	2059	15.96	2096	16.87	2133	17.79	2171	18.77
11223	3400	1909	11.97	1946	12.90	1983	13.84	2019	14.79	2055	15.75	2091	16.71	2128	17.64	2165	18.58	2200	19.53

		9.00" SP		10.00" SP		11.00" SP		12.00" SP		13.00" SP		14.00" SP		15.00" SP		16.00" SP		17.00" SP	
CFM	OV	RPM	BHP	RPM	BHP	RPM	BHP	RPM	BHP	RPM	BHP	RPM	BHP	RPM	BHP	RPM	BHP	RPM	BHP
7262	2200	2030	14.06	2126	15.89	2218	17.75												
7592	2300	2041	14.47	2137	16.38	2229	18.29	2317	20.24										
7922	2400	2053	14.89	2149	16.83	2240	18.84	2328	20.83	2413	22.86								
8252	2500	2068	15.39	2160	17.29	2252	19.33	2339	21.42	2423	23.50	2505	25.61	2583	27.76				
8582	2600	2084	15.91	2175	17.83	2263	19.83	2350	21.97	2434	24.14	2516	26.30	2594	28.49	2670	30.72		
8912	2700	2101	16.45	2190	18.40	2277	20.40	2362	22.51	2446	24.73	2526	27.00	2605	29.23	2681	31.50	2754	33.81
9243	2800	2122	17.04	2206	18.98	2292	21.02	2375	23.11	2457	25.32	2538	27.63	2616	29.98	2691	32.29	2765	34.64
9573	2900	2143	17.64	2226	19.62	2308	21.66	2390	23.79	2470	25.96	2549	28.26	2627	30.65	2702	33.09	2776	35.48
9903	3000	2167	18.39	2247	20.28	2326	22.34	2406	24.48	2485	26.69	2562	28.94	2639	31.33	2714	33.81	2787	36.32
10233	3100	2191	19.19	2268	21.00	2347	23.06	2423	25.19	2501	27.43	2577	29.72	2651	32.05	2725	34.53	2798	37.08
10563	3200	2216	20.01	2293	21.87	2367	23.80	2443	25.97	2516	28.19	2592	30.52	2666	32.88	2737	35.29	2810	37.85
10893	3300	2245	20.79	2318	22.77	2391	24.69	2464	26.77	2537	29.02	2608	31.33	2682	33.74	2753	36.18	2822	38.66
11223	3400	2274	21.58	2344	23.68	2416	25.66	2486	27.65	2557	29.88	2627	32.21	2697	34.61	2768	37.09	2837	39.61
11553	3500	2303	22.40	2372	24.54	2441	26.66	2511	28.69	2578	30.76	2648	33.13	2716	35.54	2784	38.02	2853	40.58
11883	3600	2332	23.25	2401	25.42	2468	27.63	2535	29.76	2602	31.86	2669	34.07	2736	36.52	2802	39.00	2868	41.56

Performance shown is for installation type B & D - Free or ducted inlet, Ducted outlet. Underlined ratings indicate maximum static efficiency. Power rating (BHP) does not include drive losses. Performance ratings do not include the effects of appurtenances in the airstream. NOTE: Ratings shown apply also to model QBCS.

CLASS 1	CLASS 2	CLASS 3

BCS-245 SINGLE WIDTH

CONSTANT SPEED PERFORMANCE CURVES

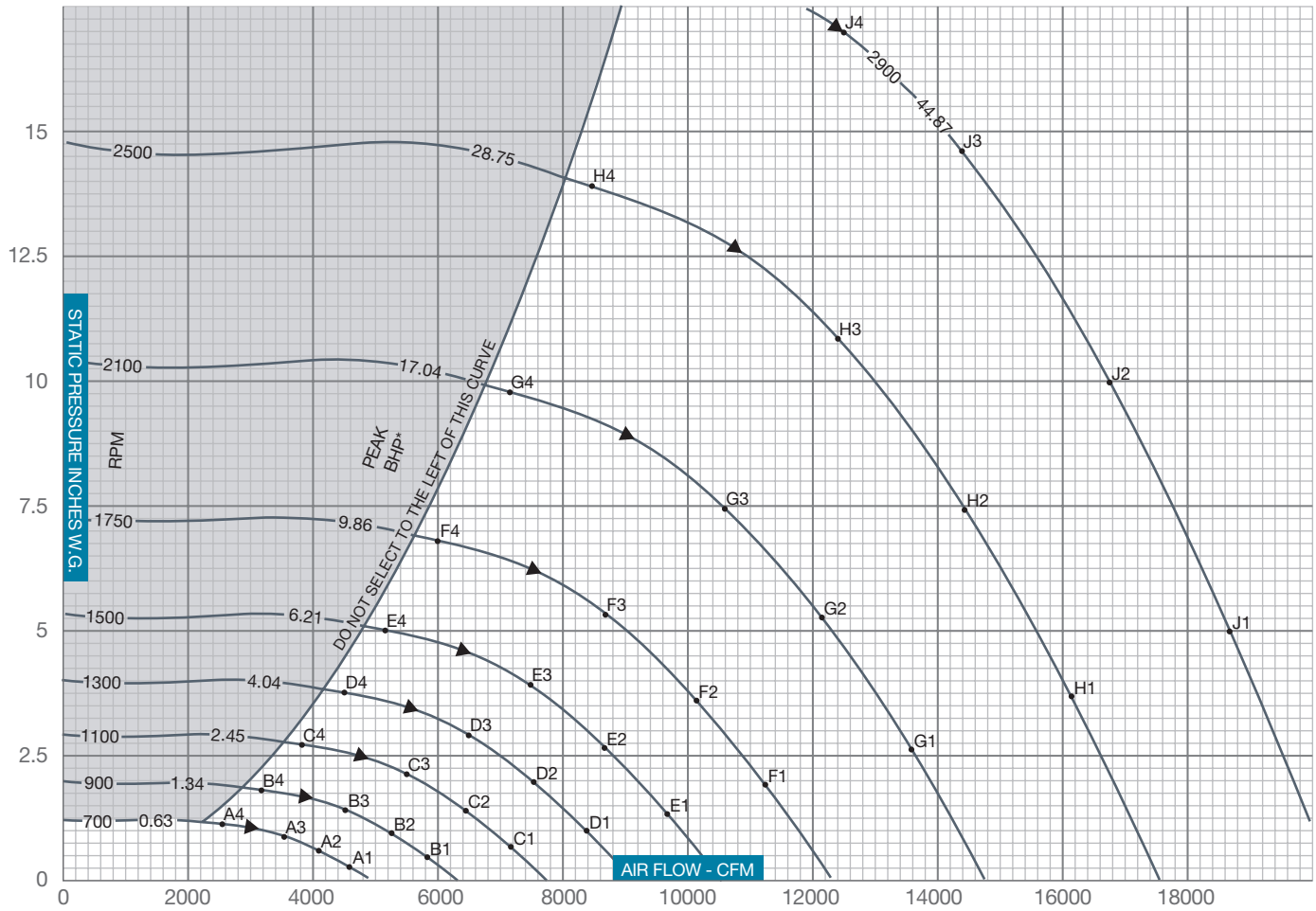

▲ PEAK STATIC EFFICIENCY
* Peak BHP does not include drive losses

$$\% \text{ STATIC EFFICIENCY} = \frac{\text{CFM x SP x .0157}}{\text{BHP}}$$

$$\text{Outlet Velocity (OV) in feet per minute} = \frac{\text{CFM}}{\text{Outlet Area}}$$

SOUND POWER LEVELS x 10^{-12} WATT

The sound power level ratings shown are in decibels, referred to 10^{-12} watts calculated per AMCA Standard 301. Values shown are for inlet L_{wi} sound power levels for installation Type B, free inlet, ducted outlet. Ratings do not include the effects of duct end correction.

FAN RPM	FAN SP	SOUND POINT	BAND / FREQUENCY 1 / 63	2 / 125	3 / 250	4 / 500	5 / 1000	6 / 2000	7 / 4000	8 / 8000
700	0.29	A1	70	72	69	67	65	62	50	38
	0.58	A2	70	70	67	65	62	58	51	43
	0.85	A3	70	70	66	63	61	58	52	46
	1.09	A4	77	76	72	69	67	62	56	49
900	0.48	B1	76	78	75	73	70	71	60	48
	0.96	B2	76	77	73	71	68	66	59	52
	1.41	B3	76	77	72	70	67	65	60	54
	1.80	B4	84	84	79	75	74	70	64	57
1100	0.72	C1	82	83	81	78	75	75	68	55
	1.44	C2	83	82	79	76	73	71	65	58
	2.11	C3	83	82	79	75	72	70	66	60
	2.68	C4	91	90	86	81	79	76	70	63
1300	1.00	D1	88	87	86	83	80	79	74	62
	2.01	D2	88	87	85	81	78	75	71	63
	2.94	D3	88	87	85	80	77	74	71	65
	3.75	D4	97	94	91	85	82	80	75	69
1500	1.34	E1	93	90	91	86	84	81	80	68
	2.67	E2	92	90	89	84	81	78	75	68
	3.92	E3	92	91	89	83	80	78	75	69
	4.99	E4	102	98	96	89	86	84	79	73

FAN RPM	FAN SP	SOUND POINT	BAND / FREQUENCY 1 / 63	2 / 125	3 / 250	4 / 500	5 / 1000	6 / 2000	7 / 4000	8 / 8000
1750	1.82	F1	98	94	95	90	88	84	86	74
	3.64	F2	97	95	93	88	86	82	80	73
	5.33	F3	97	95	94	87	84	82	80	74
	6.79	F4	107	102	100	94	89	88	84	78
2100	2.62	G1	101	100	99	96	92	89	89	81
	5.24	G2	100	100	98	94	90	87	85	79
	7.68	G3	100	100	98	93	89	86	84	79
	9.78	G4	110	109	106	100	94	93	89	83
2500	3.71	H1	104	106	103	101	97	94	93	88
	7.42	H2	103	106	103	99	95	92	89	85
	10.89	H3	103	105	103	99	94	91	89	85
	13.86	H4	113	115	110	106	99	97	94	89
2900	4.99	J1	107	111	107	106	100	98	96	94
	9.99	J2	106	110	107	104	98	96	93	89
	14.65	J3	105	110	107	104	97	95	92	89
	17.00	J4	111	116	112	108	101	98	96	91

BCS-270 SINGLE WIDTH

WHEEL DIAMETER: 27.00"
WHEEL CIRCUMFERENCE: 7.10'
OUTLET AREA: 4.016 SQ. FT.
OUTLET SIZE: 21 7/16" X 27"
INLET DIAMETER: 28½" O.D.

MAX SPEEDS	CLASS 1	CLASS 2	CLASS 3
Up to 250°F	1553	2027	2722
251°F to 400°F*	1475	1926	2586
401°F to 700°F*	1273	1662	2232
Above 700°F	CONTACT FACTORY		

*Special hi-temp construction required
Tip Speed (fpm) = 7.10 x RPM
Max BHP = 2.990 x $(RPM/1000)^3$

		0.25" SP		0.50" SP		0.75" SP		1.00" SP		1.50" SP		2.00" SP		2.50" SP		3.00" SP		3.50" SP	
CFM	OV	RPM	BHP	RPM	BHP	RPM	BHP	RPM	BHP	RPM	BHP	RPM	BHP	RPM	BHP	RPM	BHP	RPM	BHP
2806	700	383	0.16	462	0.29	539	0.44	611	0.61										
3207	800	416	0.20	486	0.34	554	0.49	621	0.67	742	1.07								
3608	900	451	0.25	514	0.40	575	0.56	636	0.74	752	1.16								
4009	1000	487	0.31	544	0.47	600	0.65	655	0.83	763	1.25	864	1.75						
4410	1100	524	0.37	577	0.55	628	0.74	679	0.94	778	1.36	875	1.86	965	2.41				
4811	1200	563	0.45	612	0.64	659	0.84	705	1.05	797	1.48	888	1.99	975	2.56	1056	3.16		
5211	1300	602	0.53	647	0.74	691	0.96	734	1.18	820	1.64	904	2.14	987	2.71	1066	3.33	1141	3.99
5612	1400	642	0.63	683	0.85	725	1.08	765	1.32	845	1.80	924	2.31	1001	2.88	1078	3.51	1151	4.19
6013	1500	682	0.74	720	0.98	760	1.22	798	1.47	873	1.98	946	2.53	1019	3.08	1092	3.72	1162	4.39
6414	1600	722	0.87	759	1.12	795	1.37	832	1.64	902	2.18	972	2.74	1040	3.32	1108	3.94	1176	4.63
6815	1700	763	1.01	798	1.27	832	1.54	866	1.82	932	2.39	998	2.96	1063	3.59	1128	4.20	1192	4.89
7216	1800	803	1.16	837	1.44	869	1.72	901	2.01	965	2.61	1027	3.22	1089	3.86	1150	4.52	1211	5.17
7617	1900	844	1.34	876	1.62	906	1.92	937	2.23	998	2.85	1057	3.50	1116	4.14	1175	4.84	1233	5.53
8018	2000	885	1.53	916	1.83	945	2.14	974	2.46	1032	3.11	1088	3.79	1145	4.46	1201	5.17	1255	5.91
8419	2100	926	1.73	956	2.05	984	2.38	1011	2.71	1067	3.39	1121	4.09	1174	4.81	1228	5.51	1281	6.28

		4.00" SP		4.50" SP		5.00" SP		5.50" SP		6.00" SP		6.50" SP		7.00" SP		7.50" SP		8.00" SP	
CFM	OV	RPM	BHP	RPM	BHP	RPM	BHP	RPM	BHP	RPM	BHP	RPM	BHP	RPM	BHP	RPM	BHP	RPM	BHP
6013	1500	1231	5.13	1297	5.89	1359	6.66												
6414	1600	1242	5.36	1307	6.15	1369	6.96	1428	7.77	1484	8.60								
6815	1700	1256	5.63	1318	6.40	1379	7.24	1438	8.10	1494	8.95	1548	9.83						
7216	1800	1271	5.92	1332	6.71	1390	7.52	1448	8.40	1504	9.31	1558	10.22	1610	11.13	1661	12.06		
7617	1900	1290	6.24	1347	7.03	1404	7.87	1460	8.73	1515	9.64	1568	10.59	1620	11.55	1670	12.51	1719	13.48
8018	2000	1311	6.62	1365	7.39	1419	8.22	1474	9.10	1527	10.01	1579	10.95	1630	11.94	1680	12.96	1729	13.96
8419	2100	1333	7.05	1385	7.80	1438	8.62	1489	9.50	1541	10.42	1592	11.36	1641	12.33	1691	13.37	1739	14.42
8820	2200	1358	7.48	1408	8.28	1457	9.06	1507	9.94	1556	10.85	1606	11.81	1655	12.80	1702	13.80	1749	14.86
9221	2300	1384	7.91	1432	8.77	1480	9.59	1527	10.41	1575	11.33	1621	12.29	1669	13.29	1716	14.31	1762	15.35
9622	2400	1411	8.37	1458	9.25	1503	10.15	1549	10.99	1594	11.85	1640	12.81	1685	13.81	1730	14.84	1776	15.90
10022	2500	1439	8.88	1484	9.75	1529	10.67	1572	11.60	1617	12.48	1660	13.37	1704	14.37	1747	15.41	1790	16.47
10423	2600	1469	9.42	1512	10.29	1555	11.22	1598	12.18	1639	13.14	1682	14.06	1724	14.98	1766	16.01	1808	17.09
10824	2700	1498	9.98	1541	10.88	1582	11.80	1624	12.78	1665	13.78	1705	14.78	1746	15.73	1786	16.69	1827	17.73
11225	2800	1530	10.55	1570	11.50	1611	12.44	1650	13.40	1691	14.42	1730	15.47	1769	16.50	1808	17.48	1847	18.48
11626	2900	1562	11.14	1601	12.14	1640	13.11	1679	14.09	1717	15.10	1756	16.16	1794	17.24	1831	18.31	1870	19.33
12027	3000	1595	11.77	1633	12.78	1669	13.82	1708	14.82	1745	15.83	1782	16.89	1820	17.99	1856	19.11	1892	20.22
12428	3100	1629	12.41	1665	13.46	1701	14.52	1737	15.58	1774	16.61	1810	17.66	1846	18.77	1882	19.91	1917	21.07
12829	3200	1663	13.09	1698	14.17	1733	15.25	1768	16.35	1803	17.43	1839	18.50	1873	19.59	1909	20.74	1944	21.92
13230	3300	1697	13.80	1732	14.90	1765	16.02	1800	17.14	1833	18.28	1868	19.38	1902	20.49	1935	21.61	1970	22.80
13631	3400	1732	14.54	1766	15.67	1799	16.81	1832	17.96	1865	19.12	1897	20.29	1931	21.42	1964	22.57	1997	23.72

		9.00" SP		10.00" SP		11.00" SP		12.00" SP		13.00" SP		14.00" SP		15.00" SP		16.00" SP		17.00" SP	
CFM	OV	RPM	BHP	RPM	BHP	RPM	BHP	RPM	BHP	RPM	BHP	RPM	BHP	RPM	BHP	RPM	BHP	RPM	BHP
8820	2200	1842	17.08	1929	19.30	2013	21.56												
9221	2300	1852	17.57	1939	19.90	2023	22.21	2103	24.58										
9622	2400	1863	18.08	1950	20.44	2033	22.88	2113	25.29	2189	27.76								
10022	2500	1877	18.69	1960	21.00	2043	23.48	2122	26.02	2199	28.53	2273	31.10	2344	33.72				
10423	2600	1891	19.32	1973	21.65	2054	24.09	2133	26.68	2209	29.32	2283	31.94	2354	34.60	2422	37.31		
10824	2700	1907	19.98	1988	22.34	2066	24.78	2143	27.34	2219	30.04	2293	32.79	2364	35.50	2432	38.26	2499	41.06
11225	2800	1925	20.69	2002	23.05	2080	25.53	2155	28.07	2230	30.76	2303	33.56	2374	36.41	2442	39.22	2509	42.07
11626	2900	1944	21.43	2020	23.83	2094	26.30	2169	28.89	2241	31.53	2313	34.33	2384	37.23	2452	40.19	2519	43.09
12027	3000	1966	22.33	2039	24.63	2111	27.13	2183	29.73	2255	32.41	2324	35.14	2394	38.06	2463	41.06	2529	44.11
12428	3100	1988	23.30	2058	25.50	2129	28.00	2198	30.60	2269	33.31	2338	36.09	2405	38.92	2473	41.94	2539	45.04
12829	3200	2011	24.31	2081	26.56	2148	28.90	2217	31.54	2283	34.23	2352	37.06	2419	39.94	2484	42.86	2549	45.97
13230	3300	2037	25.25	2103	27.65	2170	29.99	2236	32.51	2302	35.25	2367	38.05	2433	40.98	2498	43.94	2561	46.96
13631	3400	2063	26.21	2127	28.76	2192	31.16	2256	33.58	2321	36.29	2384	39.12	2447	42.03	2512	45.05	2575	48.11
14032	3500	2089	27.21	2153	29.80	2215	32.38	2278	34.85	2339	37.36	2403	40.24	2464	43.16	2526	46.17	2589	49.28
14433	3600	2116	28.23	2179	30.87	2239	33.56	2301	36.15	2361	38.70	2422	41.38	2483	44.35	2542	47.36	2603	50.47

Performance shown is for installation type B & D - Free or ducted inlet, Ducted outlet. Underlined ratings indicate maximum static efficiency. Power rating (BHP) does not include drive losses. Performance ratings do not include the effects of appurtenances in the airstream. NOTE: Ratings shown apply also to model QBCS.

CLASS 1 | CLASS 2 | CLASS 3

BCS-270 SINGLE WIDTH

CONSTANT SPEED PERFORMANCE CURVES

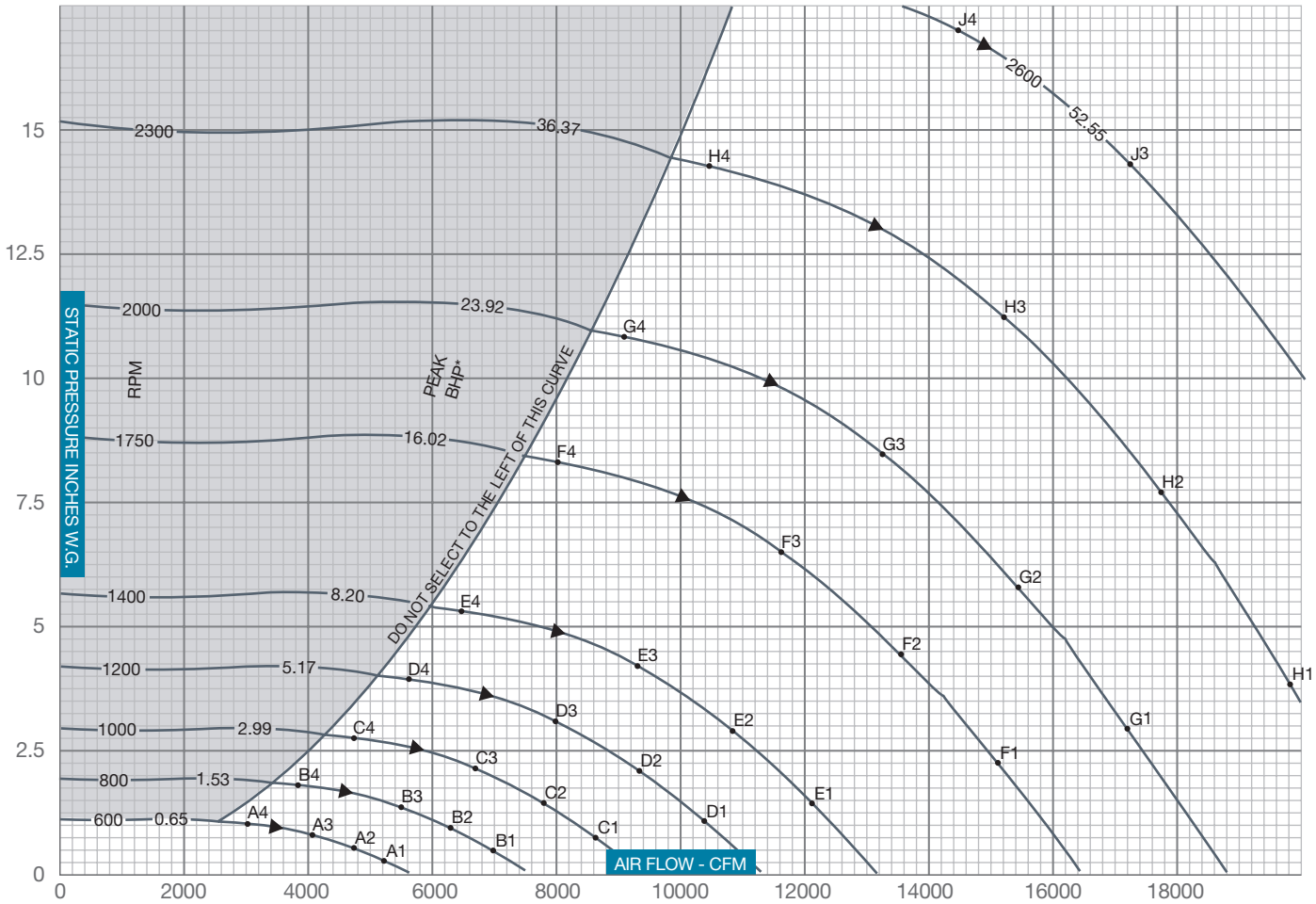

▲ PEAK STATIC EFFICIENCY
* Peak BHP does not include drive losses

$$\% \text{ STATIC EFFICIENCY} = \frac{\text{CFM x SP x .0157}}{\text{BHP}}$$

$$\text{Outlet Velocity (OV) in feet per minute} = \frac{\text{CFM}}{\text{Outlet Area}}$$

SOUND POWER LEVELS x 10^{-12} WATT

The sound power level ratings shown are in decibels, referred to 10^{-12} watts calculated per AMCA Standard 301. Values shown are for inlet L_{wi} sound power levels for installation Type B, free inlet, ducted outlet. Ratings do not include the effects of duct end correction.

FAN RPM	FAN SP	SOUND POINT	BAND / FREQUENCY 1 / 63	2 / 125	3 / 250	4 / 500	5 / 1000	6 / 2000	7 / 4000	8 / 8000
600	0.26	A1	70	70	68	65	65	59	47	35
	0.52	A2	69	68	66	63	61	56	49	41
	0.76	A3	69	68	65	63	60	56	50	44
	0.97	A4	77	75	70	68	66	60	54	48
800	0.46	B1	76	79	75	73	70	70	58	46
	0.92	B2	77	77	73	71	68	65	58	51
	1.35	B3	77	77	72	70	67	65	59	53
	1.72	B4	85	84	79	75	74	69	63	57
1000	0.72	C1	83	84	81	79	76	76	67	55
	1.44	C2	83	83	80	77	74	71	65	58
	2.12	C3	83	83	79	76	73	71	66	60
	2.69	C4	92	90	86	81	79	76	70	63
1200	1.04	D1	89	89	87	84	81	80	74	62
	2.08	D2	89	88	85	82	78	76	71	64
	3.05	D3	89	88	85	80	78	75	71	65
	3.88	D4	98	95	92	86	83	81	76	69
1400	1.41	E1	94	92	92	87	85	83	80	68
	2.83	E2	94	92	90	85	83	80	76	69
	4.15	E3	93	92	90	84	81	79	76	70
	5.28	E4	103	100	97	90	87	85	80	74

FAN RPM	FAN SP	SOUND POINT	BAND / FREQUENCY 1 / 63	2 / 125	3 / 250	4 / 500	5 / 1000	6 / 2000	7 / 4000	8 / 8000
1750	2.21	F1	102	97	98	93	91	87	89	77
	4.42	F2	101	98	96	91	89	85	83	76
	6.48	F3	100	98	97	90	87	85	83	77
	8.25	F4	110	106	104	97	92	91	87	81
2000	2.88	G1	104	102	101	97	94	91	91	82
	5.77	G2	103	102	100	95	92	89	87	80
	8.46	G3	103	102	100	95	91	88	86	81
	10.77	G4	113	110	107	101	96	94	91	85
2300	3.82	H1	106	106	105	102	97	94	94	87
	7.63	H2	105	106	104	100	95	92	90	85
	11.19	H3	105	106	104	99	94	92	89	85
	14.24	H4	115	115	111	106	100	98	95	89
2600	4.88	J1	109	111	107	105	101	98	97	92
	9.75	J2	107	110	107	103	99	96	93	89
	14.30	J3	107	110	107	103	98	95	92	89
	17.00	J4	114	116	113	108	101	98	96	92

BCS-300 SINGLE WIDTH

WHEEL DIAMETER: 30.00"
WHEEL CIRCUMFERENCE: 7.85'
OUTLET AREA: 4.957 SQ. FT.
OUTLET SIZE: 23 13/16" X 30"
INLET DIAMETER: 31½" O.D.

MAX SPEEDS	CLASS 1	CLASS 2	CLASS 3
Up to 250°F	1401	1828	2450
251°F to 400°F*	1331	1737	2328
401°F to 700°F*	1149	1499	2009
Above 700°F	CONTACT FACTORY		

*Special hi-temp construction required
Tip Speed (fpm) = 4.85 x RPM
Max BHP = 4.889 x $(RPM/1000)^3$

		0.25" SP		0.50" SP		0.75" SP		1.00" SP		1.50" SP		2.00" SP		2.50" SP		3.00" SP		3.50" SP	
CFM	OV	RPM	BHP	RPM	BHP	RPM	BHP	RPM	BHP	RPM	BHP	RPM	BHP	RPM	BHP	RPM	BHP	RPM	BHP
3965	800	372	0.24	440	0.42	499	0.61	561	0.83	665	1.28								
4461	900	405	0.30	464	0.48	521	0.69	573	0.91	677	1.43	765	1.93						
4957	1000	439	0.37	491	0.56	543	0.78	593	1.02	689	1.55	777	2.12						
5453	1100	473	0.45	518	0.65	568	0.89	615	1.14	702	1.67	789	2.30	866	2.92	937	3.55		
5948	1200	508	0.55	548	0.76	594	1.00	638	1.27	721	1.82	802	2.46	878	3.16	949	3.83	1013	4.51
6444	1300	544	0.66	582	0.88	621	1.13	663	1.41	743	2.00	814	2.62	891	3.35	961	4.12	1025	4.84
6940	1400	580	0.78	616	1.03	649	1.27	690	1.57	765	2.19	836	2.84	904	3.55	973	4.35	1037	5.18
7436	1500	616	0.92	650	1.19	681	1.45	717	1.74	788	2.39	858	3.07	920	3.79	986	4.59	1049	5.45
7931	1600	653	1.08	685	1.37	715	1.64	744	1.93	815	2.61	880	3.33	942	4.07	999	4.84	1062	5.73
8427	1700	690	1.25	720	1.57	749	1.85	776	2.15	841	2.84	903	3.59	964	4.37	1020	5.17	1075	6.01
8923	1800	727	1.45	755	1.78	783	2.09	810	2.40	868	3.09	928	3.88	986	4.68	1042	5.52	1094	6.37
9418	1900	764	1.67	791	2.01	818	2.35	843	2.67	895	3.37	954	4.18	1009	5.02	1064	5.88	1116	6.77
9914	2000	801	1.91	827	2.27	853	2.63	877	2.97	923	3.66	981	4.50	1034	5.37	1087	6.27	1138	7.19
10410	2100	838	2.17	864	2.55	888	2.94	912	3.29	957	4.01	1008	4.84	1061	5.74	1110	6.68	1160	7.62
10906	2200	876	2.45	900	2.85	923	3.26	946	3.64	990	4.39	1035	5.21	1087	6.14	1136	7.10	1183	8.08

		4.00" SP		4.50" SP		5.00" SP		5.50" SP		6.00" SP		6.50" SP		7.00" SP		7.50" SP		8.00" SP	
CFM	OV	RPM	BHP	RPM	BHP	RPM	BHP	RPM	BHP	RPM	BHP	RPM	BHP	RPM	BHP	RPM	BHP	RPM	BHP
8923	1800	1147	7.29	1203	8.30	1255	9.33	1306	10.39	1354	11.43	1400	12.42	1445	13.42	1488	14.44	1530	15.47
9418	1900	1165	7.68	1215	8.66	1268	9.73	1318	10.82	1366	11.94	1412	13.06	1457	14.10	1500	15.15	1542	16.22
9914	2000	1186	8.13	1232	9.09	1281	10.14	1331	11.26	1379	12.40	1425	13.57	1469	14.76	1512	15.88	1554	16.98
10410	2100	1208	8.59	1254	9.59	1297	10.60	1343	11.70	1391	12.88	1437	14.08	1482	15.30	1524	16.54	1566	17.77
10906	2200	1230	9.09	1276	10.11	1319	11.15	1360	12.22	1404	13.37	1450	14.60	1494	15.85	1537	17.12	1578	18.41
11401	2300	1253	9.60	1298	10.65	1340	11.73	1381	12.82	1421	13.93	1463	15.13	1507	16.41	1549	17.71	1591	19.03
11897	2400	1275	10.14	1320	11.22	1362	12.33	1403	13.45	1442	14.59	1480	15.75	1520	16.99	1562	18.32	1603	19.67
12393	2500	1301	10.70	1342	11.82	1385	12.95	1425	14.11	1464	15.28	1502	16.47	1538	17.68	1575	18.94	1616	20.32
12889	2600	1327	11.28	1366	12.44	1407	13.61	1447	14.79	1486	15.99	1523	17.21	1559	18.45	1594	19.70	1629	20.98
13384	2700	1353	11.89	1392	13.08	1430	14.29	1470	15.50	1508	16.73	1545	17.98	1581	19.25	1616	20.53	1650	21.83
13880	2800	1380	12.53	1418	13.75	1455	14.99	1492	16.24	1531	17.50	1567	18.78	1603	20.08	1638	21.39	1672	22.72
14376	2900	1407	13.20	1445	14.45	1482	15.72	1517	17.01	1553	18.31	1590	19.62	1625	20.94	1660	22.29	1693	23.65
14872	3000	1434	13.91	1472	15.18	1508	16.48	1543	17.79	1577	19.13	1612	20.48	1648	21.84	1682	23.21	1715	24.60
15367	3100	1461	14.64	1499	15.94	1535	17.27	1569	18.62	1603	19.98	1636	21.37	1670	22.76	1704	24.16	1738	25.58
15863	3200	1489	15.40	1526	16.74	1561	18.09	1596	19.47	1629	20.87	1661	22.28	1693	23.72	1727	25.15	1760	26.60
16359	3300	1519	16.25	1553	17.57	1588	18.95	1623	20.36	1656	21.79	1688	23.23	1719	24.70	1750	26.18	1782	27.66
16854	3400	1552	17.19	1581	18.43	1616	19.85	1649	21.28	1682	22.74	1714	24.22	1745	25.71	1775	27.22	1805	28.75
17350	3500	1586	18.16	1611	19.39	1643	20.78	1677	22.24	1709	23.73	1741	25.24	1771	26.76	1801	28.30	1830	29.86
17846	3600	1619	19.18	1644	20.44	1671	21.74	1704	23.24	1736	24.76	1767	26.29	1798	27.85	1827	29.42	1856	31.00
18342	3700	1653	20.25	1678	21.53	1702	22.83	1731	24.28	1763	25.82	1794	27.39	1824	28.97	1854	30.57	1882	32.19

		9.00" SP		10.00" SP		11.00" SP		12.00" SP		13.00" SP		14.00" SP		15.00" SP		16.00" SP		17.00" SP	
CFM	OV	RPM	BHP	RPM	BHP	RPM	BHP	RPM	BHP	RPM	BHP	RPM	BHP	RPM	BHP	RPM	BHP	RPM	BHP
12393	2500	1695	23.14	1769	26.04	1841	29.02	1909	31.79	1975	34.56	2038	37.36	2100	40.21				
12889	2600	1708	23.86	1782	26.82	1853	29.86	1921	32.97	1987	35.82	2050	38.70	2111	41.61	2170	44.56		
13384	2700	1720	24.60	1795	27.62	1866	30.71	1934	33.88	1999	37.11	2062	40.06	2123	43.04	2182	46.07	2240	49.12
13880	2800	1736	25.43	1807	28.43	1878	31.58	1946	34.81	2011	38.10	2074	41.45	2135	44.50	2194	47.60	2251	50.72
14376	2900	1758	26.41	1820	29.27	1891	32.47	1959	35.75	2024	39.10	2086	42.52	2147	45.99	2206	49.16	2263	52.36
14872	3000	1780	27.42	1841	30.31	1904	33.38	1971	36.72	2036	40.12	2099	43.59	2159	47.13	2218	50.73	2275	54.02
15367	3100	1801	28.47	1862	31.41	1921	34.42	1984	37.70	2049	41.16	2112	44.69	2172	48.29	2230	51.94	2287	55.66
15863	3200	1823	29.55	1884	32.55	1942	35.62	1998	38.73	2062	42.23	2124	45.81	2185	49.46	2243	53.17	2300	56.95
16359	3300	1846	30.66	1906	33.73	1964	36.85	2019	40.02	2075	43.31	2137	46.95	2197	50.66	2256	54.43	2312	58.26
16854	3400	1868	31.81	1928	34.94	1986	38.12	2041	41.35	2094	44.64	2150	48.11	2210	51.88	2268	55.70	2325	59.59
17350	3500	1890	33.00	1950	36.18	2007	39.42	2063	42.72	2116	46.06	2167	49.46	2223	53.12	2281	57.00	2337	60.94
17846	3600	1913	34.23	1973	37.47	2030	40.77	2085	44.12	2137	47.53	2189	50.98	2238	54.49	2294	58.32	2350	62.32
18342	3700	1938	35.47	1995	38.79	2052	42.15	2107	45.57	2159	49.03	2210	52.54	2260	56.11	2308	59.72	2363	63.72
18837	3800	1964	36.76	2018	40.16	2074	43.58	2129	47.05	2181	50.57	2232	54.15	2281	57.77	2329	61.44	2376	65.15
19333	3900	1990	38.08	2043	41.55	2097	45.04	2151	48.58	2203	52.16	2254	55.79	2303	59.47	2351	63.20	2397	66.97

Performance shown is for installation type B & D - Free or ducted inlet, Ducted outlet. Underlined ratings indicate maximum static efficiency. Power rating (BHP) does not include drive losses. Performance ratings do not include the effects of appurtenances in the airstream. NOTE: Ratings shown apply also to model QBCS.

CLASS 1 | CLASS 2 | CLASS 3

BCS-300 SINGLE WIDTH

CONSTANT SPEED PERFORMANCE CURVES

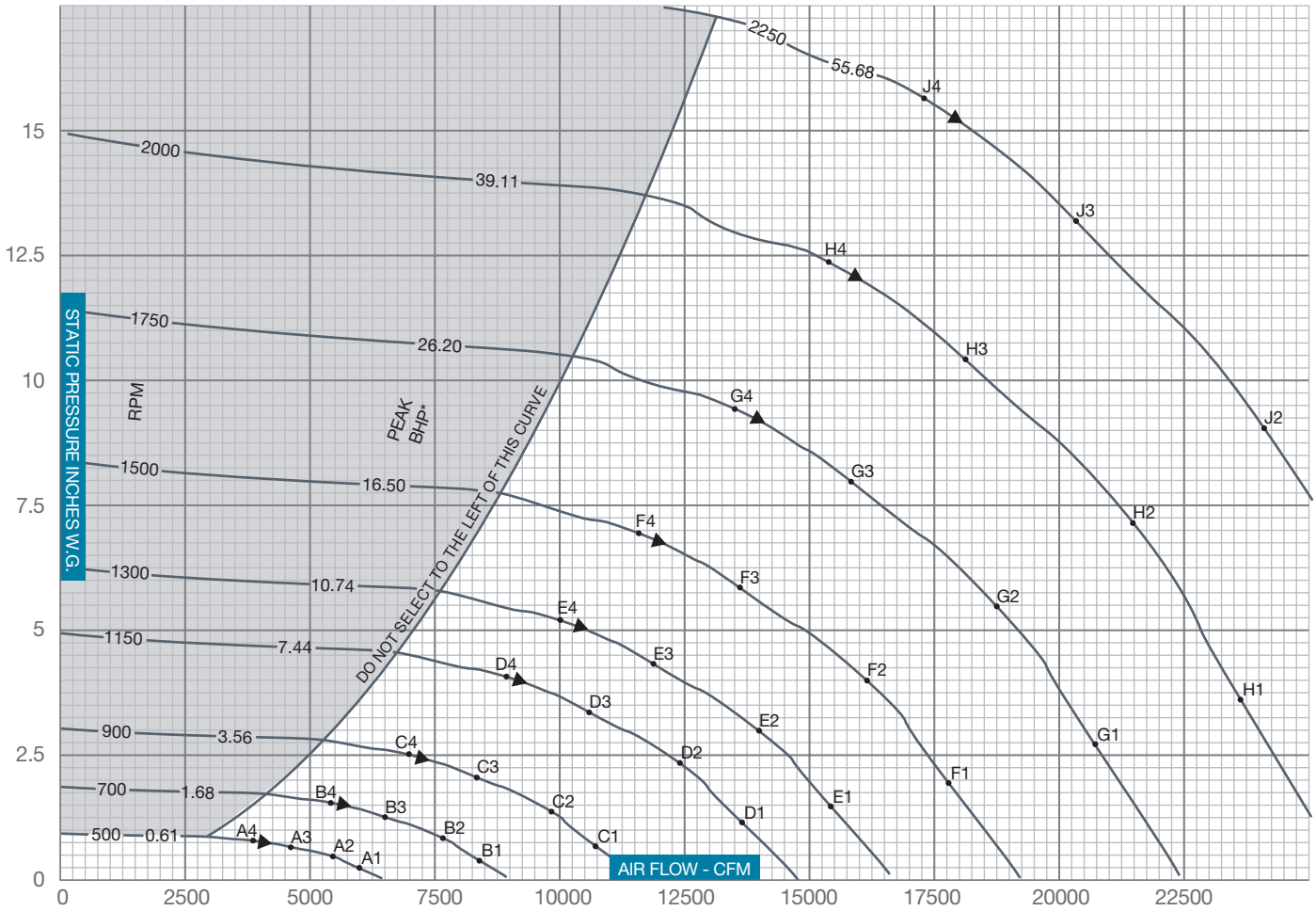

▲ PEAK STATIC EFFICIENCY
* Peak BHP does not include drive losses

$$\%\text{STATIC EFFICIENCY} = \frac{\text{CFM x SP x .0157}}{\text{BHP}}$$

$$\text{Outlet Velocity (OV) in feet per minute} = \frac{\text{CFM}}{\text{Outlet Area}}$$

SOUND POWER LEVELS x 10^{-12} WATT

The sound power level ratings shown are in decibels, referred to 10^{-12} watts calculated per AMCA Standard 301. Values shown are for inlet L_{wi} sound power levels for installation Type B, free inlet, ducted outlet. Ratings do not include the effects of duct end correction.

FAN RPM	FAN SP	SOUND POINT	BAND / FREQUENCY 1 / 63	2 / 125	3 / 250	4 / 500	5 / 1000	6 / 2000	7 / 4000	8 / 8000
500	0.25	A1	70	67	66	64	64	56	45	34
	0.45	A2	67	65	64	61	61	54	44	35
	0.65	A3	67	64	63	61	60	53	45	37
	0.77	A4	65	62	62	60	58	52	46	39
700	0.44	B1	73	80	74	73	71	69	57	46
	0.88	B2	71	77	72	71	68	66	56	47
	1.28	B3	70	76	70	70	67	65	57	48
	1.51	B4	70	74	69	68	66	63	56	50
900	0.73	C1	75	88	80	80	76	77	67	56
	1.45	C2	74	85	78	77	74	74	65	56
	2.12	C3	74	84	76	76	73	73	65	57
	2.50	C4	75	82	75	75	72	71	64	57
1150	1.19	D1	85	90	89	85	82	82	76	65
	2.38	D2	84	87	87	83	80	79	74	64
	3.45	D3	84	87	86	82	79	78	73	65
	4.09	D4	85	86	84	80	78	77	72	65
1300	1.52	E1	90	91	94	88	86	84	81	70
	3.04	E2	89	89	91	86	84	82	78	69
	4.41	E3	90	88	90	84	83	81	77	69
	5.22	E4	90	88	88	83	82	80	76	69

FAN RPM	FAN SP	SOUND POINT	BAND / FREQUENCY 1 / 63	2 / 125	3 / 250	4 / 500	5 / 1000	6 / 2000	7 / 4000	8 / 8000
1500	2.02	F1	95	92	99	91	90	87	86	75
	4.04	F2	94	90	96	89	87	85	83	74
	5.88	F3	96	90	95	87	86	84	82	74
	6.95	F4	96	90	93	86	85	83	80	73
1750	2.75	G1	101	93	104	94	94	90	92	81
	5.50	G2	100	92	101	92	92	88	88	79
	8.00	G3	102	91	100	91	90	88	87	79
	9.46	G4	103	92	98	90	89	87	85	78
2000	3.59	H1	103	98	105	99	97	94	95	86
	7.18	H2	102	97	103	97	95	92	91	84
	10.45	H3	105	97	102	96	93	91	90	84
	12.36	H4	105	98	100	95	92	90	88	82
2250	4.55	J1	105	103	106	104	99	97	97	90
	9.09	J2	104	102	104	101	97	95	94	88
	13.22	J3	107	102	103	100	96	94	93	87
	15.64	J4	107	103	102	99	95	93	91	86

BCS-330 SINGLE WIDTH

WHEEL DIAMETER: 33.00"
WHEEL CIRCUMFERENCE: 8.64'
OUTLET AREA: 6.009 SQ. FT.
OUTLET SIZE: 26 3/16" X 33 1/16"
INLET DIAMETER: 34 1/2" O.D.

MAX SPEEDS	CLASS 1	CLASS 2	CLASS 3
Up to 250°F	1274	1662	2227
251°F to 400°F*	1210	1579	2116
401°F to 700°F*	1045	1363	1826
Above 700°F	CONTACT FACTORY		

*Special hi-temp construction required
Tip Speed (fpm) = 8.64 x RPM
Max BHP = 7.874 x $(RPM/1000)^3$

		0.25" SP		0.50" SP		0.75" SP		1.00" SP		1.50" SP		2.00" SP		2.50" SP		3.00" SP		3.50" SP	
CFM	OV	RPM	BHP	RPM	BHP	RPM	BHP	RPM	BHP	RPM	BHP	RPM	BHP	RPM	BHP	RPM	BHP	RPM	BHP
4798	800	338	0.29	400	0.50	454	0.73	510	1.01	605	1.55								
5398	900	368	0.36	422	0.59	474	0.83	521	1.10	615	1.73	696	2.34						
5998	1000	399	0.45	446	0.68	494	0.95	539	1.23	627	1.88	706	2.57						
6598	1100	430	0.55	471	0.79	516	1.07	559	1.37	638	2.02	717	2.78	788	3.54	852	4.29		
7198	1200	462	0.67	498	0.92	540	1.21	580	1.53	656	2.21	729	2.97	799	3.82	862	4.63	921	5.45
7797	1300	494	0.80	529	1.07	565	1.37	603	1.71	675	2.42	740	3.17	810	4.06	873	4.99	932	5.85
8397	1400	527	0.95	560	1.24	590	1.54	627	1.90	696	2.65	760	3.44	822	4.30	885	5.26	943	6.27
8997	1500	560	1.12	591	1.44	619	1.75	652	2.10	717	2.89	780	3.72	837	4.58	896	5.55	954	6.59
9597	1600	593	1.31	622	1.66	650	1.98	677	2.33	741	3.16	800	4.02	856	4.92	908	5.86	966	6.93
10197	1700	627	1.52	654	1.90	681	2.24	706	2.60	765	3.44	820	4.35	876	5.28	928	6.25	977	7.28
10797	1800	661	1.75	687	2.15	712	2.53	736	2.90	789	3.74	844	4.69	897	5.67	948	6.67	995	7.71
11396	1900	694	2.02	719	2.44	743	2.84	767	3.23	814	4.07	868	5.05	917	6.07	968	7.12	1015	8.19
11996	2000	728	2.31	752	2.74	775	3.18	798	3.59	840	4.43	892	5.44	940	6.50	988	7.58	1035	8.69
12596	2100	762	2.62	785	3.08	807	3.55	829	3.98	870	4.85	916	5.86	964	6.95	1009	8.08	1055	9.22
13196	2200	796	2.97	818	3.45	839	3.94	860	4.40	900	5.31	941	6.30	988	7.43	1032	8.59	1075	9.78

		4.00" SP		4.50" SP		5.00" SP		5.50" SP		6.00" SP		6.50" SP		7.00" SP		7.50" SP		8.00" SP	
CFM	OV	RPM	BHP	RPM	BHP	RPM	BHP	RPM	BHP	RPM	BHP	RPM	BHP	RPM	BHP	RPM	BHP	RPM	BHP
10797	1800	1043	8.82	1093	10.04	1141	11.29	1187	12.58	1231	13.83	1273	15.03	1314	16.24	1353	17.47	1391	18.72
11396	1900	1059	9.29	1105	10.48	1153	11.77	1198	13.09	1242	14.44	1284	15.80	1325	17.06	1364	18.33	1402	19.62
11996	2000	1078	9.83	1120	11.00	1164	12.26	1210	13.62	1253	15.00	1295	16.42	1335	17.86	1375	19.22	1413	20.55
12596	2100	1098	10.40	1140	11.60	1179	12.83	1221	14.16	1265	15.58	1307	17.03	1347	18.51	1386	20.02	1423	21.50
13196	2200	1119	10.99	1160	12.23	1199	13.49	1236	14.78	1276	16.18	1318	17.66	1358	19.17	1397	20.71	1435	22.28
13796	2300	1139	11.62	1180	12.89	1218	14.19	1256	15.51	1291	16.86	1330	18.31	1370	19.85	1409	21.43	1446	23.03
14396	2400	1159	12.27	1200	13.58	1239	14.92	1276	16.27	1311	17.66	1345	19.06	1381	20.55	1420	22.16	1458	23.80
14995	2500	1182	12.95	1220	14.30	1259	15.67	1296	17.07	1331	18.49	1365	19.93	1398	21.39	1432	22.91	1469	24.58
15595	2600	1206	13.65	1242	15.05	1279	16.46	1316	17.90	1351	19.35	1385	20.83	1418	22.32	1450	23.84	1481	25.39
16195	2700	1230	14.39	1266	15.83	1300	17.29	1336	18.76	1371	20.25	1405	21.76	1437	23.29	1469	24.85	1500	26.42
16795	2800	1254	15.17	1290	16.64	1323	18.13	1357	19.65	1391	21.18	1425	22.73	1457	24.30	1489	25.89	1520	27.50
17395	2900	1279	15.98	1314	17.48	1347	19.02	1379	20.58	1412	22.15	1445	23.73	1478	25.34	1509	26.97	1539	28.61
17995	3000	1304	16.83	1338	18.37	1371	19.94	1403	21.53	1434	23.15	1466	24.78	1498	26.42	1529	28.08	1559	29.76
18595	3100	1328	17.71	1362	19.29	1395	20.90	1427	22.53	1457	24.18	1487	25.86	1518	27.54	1549	29.24	1580	30.96
19194	3200	1353	18.64	1387	20.25	1419	21.89	1451	23.56	1481	25.25	1510	26.96	1539	28.70	1570	30.44	1600	32.19
19794	3300	1381	19.66	1412	21.26	1444	22.93	1475	24.64	1505	26.36	1534	28.11	1563	29.88	1590	31.68	1620	33.47
20394	3400	1411	20.79	1437	22.30	1469	24.02	1499	25.75	1529	27.52	1558	29.30	1586	31.11	1614	32.94	1641	34.78
20994	3500	1441	21.98	1465	23.46	1494	25.14	1524	26.92	1554	28.71	1582	30.54	1610	32.38	1637	34.24	1664	36.13
21594	3600	1472	23.21	1495	24.73	1519	26.31	1549	28.12	1578	29.96	1607	31.81	1634	33.69	1661	35.59	1688	37.52
22194	3700	1503	24.51	1525	26.06	1547	27.63	1574	29.37	1603	31.25	1631	33.14	1658	35.05	1685	36.99	1711	38.95

		9.00" SP		10.00" SP		11.00" SP		12.00" SP		13.00" SP		14.00" SP		15.00" SP		16.00" SP		17.00" SP	
CFM	OV	RPM	BHP	RPM	BHP	RPM	BHP	RPM	BHP	RPM	BHP	RPM	BHP	RPM	BHP	RPM	BHP	RPM	BHP
14995	2500	1541	28.00	1609	31.51	1673	35.12	1736	38.47	1795	41.82	1853	45.21	1909	48.65				
15595	2600	1552	28.87	1620	32.46	1685	36.13	1746	39.89	1806	43.34	1864	46.83	1919	50.35	1973	53.92		
16195	2700	1564	29.77	1632	33.42	1696	37.16	1758	40.99	1817	44.90	1875	48.47	1930	52.08	1984	55.74	2036	59.44
16795	2800	1578	30.77	1643	34.41	1708	38.22	1769	42.11	1828	46.10	1885	50.15	1941	53.85	1995	57.59	2047	61.38
17395	2900	1598	31.96	1655	35.41	1719	39.29	1781	43.26	1840	47.31	1897	51.44	1952	55.65	2005	59.48	2058	63.35
17995	3000	1618	33.18	1673	36.68	1731	40.39	1792	44.43	1851	48.55	1908	52.75	1963	57.03	2016	61.38	2068	65.36
18595	3100	1638	34.45	1693	38.01	1746	41.65	1804	45.62	1863	49.81	1920	54.08	1975	58.43	2028	62.85	2079	67.35
19194	3200	1658	35.75	1713	39.39	1765	43.09	1816	46.87	1874	51.09	1931	55.43	1986	59.85	2039	64.34	2091	68.90
19794	3300	1678	37.10	1733	40.81	1785	44.59	1836	48.43	1886	52.40	1943	56.81	1997	61.30	2051	65.86	2102	70.49
20394	3400	1698	38.49	1753	42.27	1805	46.12	1855	50.04	1904	54.01	1954	58.22	2009	62.77	2062	67.40	2113	72.10
20994	3500	1719	39.93	1773	43.78	1825	47.70	1875	51.69	1923	55.74	1970	59.85	2021	64.27	2074	68.97	2125	73.74
21594	3600	1739	41.41	1793	45.34	1845	49.33	1895	53.39	1943	57.51	1990	61.69	2035	65.93	2085	70.57	2137	75.41
22194	3700	1762	42.92	1814	46.94	1865	51.01	1915	55.14	1963	59.33	2009	63.58	2054	67.89	2098	72.26	2148	77.10
22793	3800	1786	44.47	1834	48.59	1886	52.73	1935	56.93	1983	61.19	2029	65.52	2074	69.90	2118	74.34	2160	78.83
23393	3900	1809	46.08	1857	50.27	1906	54.50	1956	58.78	2003	63.11	2049	67.51	2094	71.96	2137	76.47	2179	81.04

Performance shown is for installation type B & D - Free or ducted inlet, Ducted outlet. Underlined ratings indicate maximum static efficiency. Power rating (BHP) does not include drive losses. Performance ratings do not include the effects of appurtenances in the airstream. NOTE: Ratings shown apply also to model QBCS.

CLASS 1 | CLASS 2 | CLASS 3

BCS-330 SINGLE WIDTH

CONSTANT SPEED PERFORMANCE CURVES

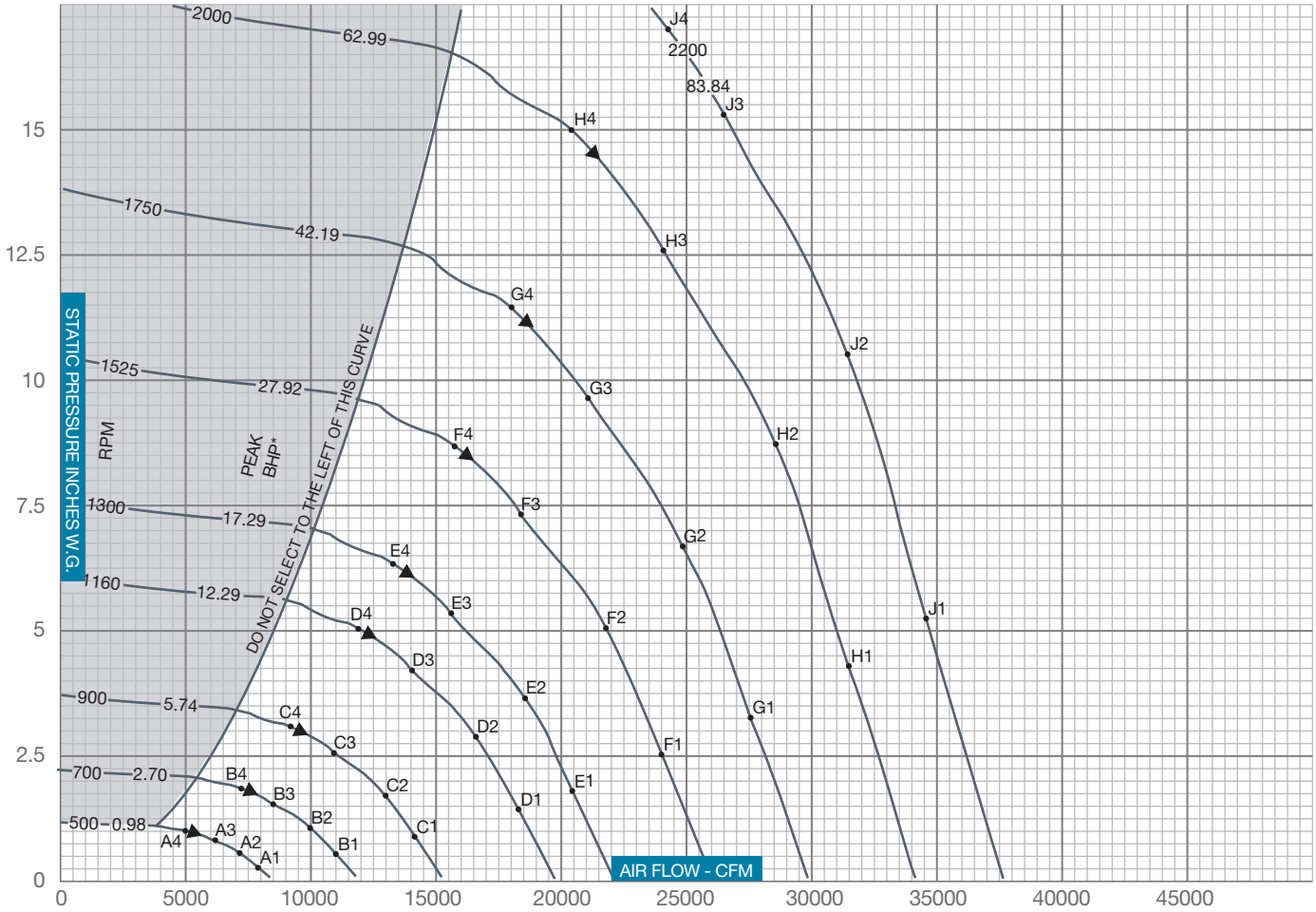

▲ PEAK STATIC EFFICIENCY
* Peak BHP does not include drive losses

$$\%\,\text{STATIC EFFICIENCY} = \frac{\text{CFM x SP x .0157}}{\text{BHP}}$$

$$\text{Outlet Velocity (OV) in feet per minute} = \frac{\text{CFM}}{\text{Outlet Area}}$$

SOUND POWER LEVELS x 10^{-12} WATT

The sound power level ratings shown are in decibels, referred to 10^{-12} watts calculated per AMCA Standard 301. Values shown are for inlet L_{wi} sound power levels for installation Type B, free inlet, ducted outlet. Ratings do not include the effects of duct end correction.

FAN RPM	FAN SP	SOUND POINT	BAND / FREQUENCY 1 / 63	2 / 125	3 / 250	4 / 500	5 / 1000	6 / 2000	7 / 4000	8 / 8000
500	0.27	A1	74	70	69	67	67	59	48	37
	0.54	A2	71	68	67	64	64	57	47	38
	0.79	A3	70	67	66	64	63	56	48	40
	0.93	A4	68	66	65	63	61	55	49	42
700	0.53	B1	76	83	77	76	74	71	60	49
	1.06	B2	75	80	75	74	71	68	59	50
	1.55	B3	74	79	73	72	70	68	59	51
	1.83	B4	74	78	72	71	69	66	59	52
900	0.88	C1	79	91	83	83	79	80	70	59
	1.76	C2	78	88	81	80	76	77	68	59
	2.56	C3	77	87	79	79	76	76	68	60
	3.03	C4	78	85	78	78	75	74	67	60
1160	1.46	D1	89	93	92	88	86	85	79	68
	2.92	D2	88	91	90	86	83	82	77	67
	4.25	D3	88	90	89	85	83	81	76	68
	5.03	D4	89	89	87	83	82	80	75	68
1300	1.84	E1	93	94	97	90	89	87	84	73
	3.67	E2	92	92	94	88	86	85	81	72
	5.34	E3	93	91	93	87	86	84	80	72
	6.32	E4	94	91	91	86	84	82	79	72

FAN RPM	FAN SP	SOUND POINT	BAND / FREQUENCY 1 / 63	2 / 125	3 / 250	4 / 500	5 / 1000	6 / 2000	7 / 4000	8 / 8000
1525	2.53	F1	99	95	103	94	93	90	90	79
	5.05	F2	98	94	100	92	91	88	87	77
	7.35	F3	100	93	99	91	90	87	86	77
	8.69	F4	101	93	97	90	88	86	84	77
1750	3.33	G1	104	96	107	97	97	93	95	84
	6.65	G2	103	95	104	95	95	91	91	82
	9.68	G3	106	95	103	94	93	90	90	82
	11.45	G4	106	96	101	93	92	90	88	81
2000	4.35	H1	107	101	108	102	100	97	97	89
	8.69	H2	106	100	106	100	98	94	94	87
	12.64	H3	108	100	105	99	96	94	93	86
	14.95	H4	109	101	103	98	95	93	91	85
2200	5.26	J1	108	105	109	106	102	99	99	92
	10.52	J2	107	104	107	104	100	97	96	90
	15.30	J3	110	104	106	102	98	96	95	90
	17.00	J4	110	105	105	101	97	95	93	88

BCS-365 SINGLE WIDTH

WHEEL DIAMETER: 36.50"
WHEEL CIRCUMFERENCE: 9.56'
OUTLET AREA: 7.347 SQ. FT.
OUTLET SIZE: 29" X 36½"
INLET DIAMETER: 37½" O.D.

MAX SPEEDS	CLASS 1	CLASS 2	CLASS 3
Up to 250°F	1152	1502	2014
251°F to 400°F*	1094	1427	1913
401°F to 700°F*	945	1232	1651
Above 700°F	CONTACT FACTORY		

*Special hi-temp construction required
Tip Speed (fpm) = 9.56 x RPM
Max BHP = 13.034 x (RPM/1000)^3

		0.25" SP		0.50" SP		0.75" SP		1.00" SP		1.50" SP		2.00" SP		2.50" SP		3.00" SP		3.50" SP	
CFM	OV	RPM	BHP	RPM	BHP	RPM	BHP	RPM	BHP	RPM	BHP	RPM	BHP	RPM	BHP	RPM	BHP	RPM	BHP
5870	800	306	0.36	362	0.62	411	0.90	461	1.23	547	1.90								
6604	900	333	0.44	381	0.72	428	1.02	471	1.35	556	2.12	629	2.86						
7338	1000	361	0.55	403	0.83	447	1.16	488	1.50	567	2.29	639	3.14						
8072	1100	389	0.67	426	0.96	467	1.31	506	1.68	577	2.47	649	3.41	712	4.33	770	5.25		
8805	1200	418	0.82	451	1.12	488	1.48	524	1.88	593	2.70	659	3.64	722	4.68	780	5.67	833	6.67
9539	1300	447	0.98	478	1.31	511	1.67	545	2.09	611	2.96	669	3.88	732	4.96	789	6.10	843	7.16
10273	1400	477	1.16	506	1.52	533	1.88	567	2.32	629	3.24	687	4.20	743	5.26	800	6.44	852	7.67
11007	1500	506	1.37	534	1.76	560	2.14	589	2.57	648	3.54	705	4.55	756	5.61	810	6.79	863	8.07
11741	1600	537	1.60	563	2.03	588	2.43	612	2.85	670	3.86	723	4.92	774	6.02	821	7.17	873	8.48
12475	1700	567	1.86	591	2.32	615	2.75	638	3.18	691	4.21	742	5.32	792	6.46	839	7.65	883	8.90
13208	1800	597	2.15	621	2.64	644	3.09	665	3.55	713	4.58	763	5.74	811	6.93	857	8.16	899	9.43
13942	1900	628	2.47	650	2.98	672	3.48	693	3.95	736	4.98	784	6.18	829	7.43	875	8.71	917	10.02
14676	2000	658	2.82	680	3.36	701	3.90	721	4.39	759	5.42	806	6.66	850	7.95	893	9.28	935	10.64
15410	2100	689	3.21	710	3.77	730	4.35	749	4.87	786	5.94	829	7.17	872	8.50	912	9.88	954	11.29
16144	2200	720	3.63	740	4.22	759	4.82	778	5.39	814	6.50	851	7.70	894	9.09	933	10.51	972	11.97

		4.00" SP		4.50" SP		5.00" SP		5.50" SP		6.00" SP		6.50" SP		7.00" SP		7.50" SP		8.00" SP	
CFM	OV	RPM	BHP	RPM	BHP	RPM	BHP	RPM	BHP	RPM	BHP	RPM	BHP	RPM	BHP	RPM	BHP	RPM	BHP
13208	1800	943	10.79	988	12.28	1032	13.81	1073	15.39	1113	16.92	1151	18.39	1188	19.87	1223	21.38	1258	22.90
13942	1900	957	11.37	999	12.83	1042	14.40	1083	16.01	1123	17.67	1161	19.33	1198	20.87	1233	22.43	1267	24.01
14676	2000	975	12.03	1013	13.45	1053	15.00	1094	16.66	1133	18.36	1171	20.09	1207	21.85	1243	23.51	1277	25.14
15410	2100	993	12.72	1030	14.19	1066	15.69	1104	17.33	1144	19.06	1181	20.84	1218	22.64	1253	24.49	1287	26.31
16144	2200	1011	13.45	1048	14.96	1084	16.51	1118	18.08	1154	19.79	1192	21.61	1228	23.46	1263	25.34	1297	27.26
16877	2300	1030	14.21	1067	15.77	1102	17.36	1135	18.98	1168	20.62	1202	22.40	1238	24.29	1274	26.21	1307	28.17
17611	2400	1048	15.01	1085	16.61	1120	18.25	1153	19.91	1185	21.60	1216	23.32	1249	25.14	1284	27.11	1318	29.11
18345	2500	1069	15.84	1103	17.50	1138	19.17	1171	20.88	1203	22.62	1234	24.38	1264	26.17	1294	28.03	1328	30.08
19079	2600	1091	16.70	1123	18.41	1156	20.14	1190	21.89	1221	23.67	1252	25.48	1282	27.31	1311	29.17	1339	31.06
19813	2700	1112	17.61	1144	19.36	1175	21.15	1208	22.95	1240	24.77	1270	26.62	1300	28.49	1328	30.40	1356	32.32
20547	2800	1134	18.55	1166	20.35	1196	22.19	1227	24.04	1258	25.91	1288	27.81	1318	29.72	1346	31.67	1374	33.64
21280	2900	1156	19.55	1188	21.39	1218	23.26	1247	25.17	1277	27.10	1307	29.04	1336	31.00	1364	32.99	1392	35.00
22014	3000	1179	20.58	1210	22.47	1239	24.39	1268	26.34	1296	28.32	1325	30.31	1354	32.32	1382	34.36	1410	36.41
22748	3100	1201	21.67	1232	23.60	1261	25.56	1290	27.56	1317	29.58	1344	31.64	1373	33.69	1401	35.77	1428	37.87
23482	3200	1224	22.80	1254	24.78	1283	26.78	1312	28.82	1339	30.89	1366	32.99	1391	35.11	1419	37.24	1446	39.38
24216	3300	1249	24.06	1277	26.00	1306	28.06	1334	30.14	1361	32.25	1387	34.39	1413	36.56	1438	38.75	1465	40.94
24950	3400	1276	25.44	1299	27.28	1328	29.38	1356	31.51	1383	33.66	1409	35.85	1434	38.06	1459	40.30	1484	42.55
25683	3500	1303	26.89	1324	28.70	1350	30.76	1378	32.93	1405	35.13	1431	37.36	1456	39.61	1480	41.89	1504	44.20
26417	3600	1331	28.40	1352	30.26	1373	32.19	1400	34.40	1427	36.65	1453	38.92	1478	41.22	1502	43.54	1526	45.89
27151	3700	1358	29.98	1379	31.88	1399	33.80	1423	35.94	1449	38.23	1475	40.54	1499	42.88	1524	45.25	1547	47.65

		9.00" SP		10.00" SP		11.00" SP		12.00" SP		13.00" SP		14.00" SP		15.00" SP		16.00" SP		17.00" SP	
CFM	OV	RPM	BHP	RPM	BHP	RPM	BHP	RPM	BHP	RPM	BHP	RPM	BHP	RPM	BHP	RPM	BHP	RPM	BHP
18345	2500	1393	34.25	1454	38.55	1513	42.96	1569	47.06	1623	51.16	1675	55.31	1726	59.52				
19079	2600	1403	35.32	1465	39.70	1523	44.20	1579	48.80	1633	53.03	1685	57.28	1735	61.60	1784	65.96		
19813	2700	1414	36.42	1475	40.88	1533	45.46	1589	50.15	1643	54.93	1695	59.30	1745	63.72	1794	68.19	1841	72.71
20547	2800	1427	37.65	1486	42.09	1544	46.75	1600	51.52	1653	56.39	1705	61.35	1755	65.88	1803	70.46	1850	75.09
21280	2900	1445	39.10	1496	43.32	1554	48.07	1610	52.92	1663	57.88	1715	62.94	1765	68.08	1813	72.76	1860	77.50
22014	3000	1463	40.60	1513	44.87	1565	49.42	1620	54.35	1674	59.39	1725	64.53	1775	69.77	1823	75.10	1870	79.96
22748	3100	1481	42.14	1531	46.50	1578	50.95	1631	55.81	1684	60.94	1736	66.16	1785	71.48	1833	76.89	1880	82.39
23482	3200	1499	43.74	1548	48.19	1596	52.72	1642	57.34	1695	62.51	1746	67.81	1796	73.22	1844	78.71	1890	84.30
24216	3300	1517	45.39	1566	49.93	1614	54.54	1660	59.25	1705	64.11	1756	69.50	1806	74.99	1854	80.57	1900	86.23
24950	3400	1535	47.09	1585	51.72	1632	56.42	1677	61.21	1721	66.08	1767	71.22	1816	76.79	1864	82.45	1911	88.21
25683	3500	1554	48.85	1603	53.56	1650	58.36	1695	63.23	1739	68.19	1781	73.21	1827	78.63	1875	84.37	1921	90.21
26417	3600	1572	50.66	1621	55.47	1668	60.35	1713	65.31	1757	70.35	1799	75.47	1840	80.65	1885	86.33	1932	92.25
27151	3700	1593	52.51	1640	57.43	1686	62.40	1731	67.45	1775	72.58	1817	77.78	1857	83.05	1897	88.40	1942	94.32
27885	3800	1614	54.41	1658	59.44	1705	64.51	1750	69.65	1793	74.86	1835	80.15	1875	85.51	1915	90.94	1953	96.44
28619	3900	1636	56.37	1679	61.50	1723	66.68	1768	71.91	1811	77.21	1853	82.59	1893	88.04	1932	93.55	1970	99.14

Performance shown is for installation type B & D - Free or ducted inlet, Ducted outlet. Underlined ratings indicate maximum static efficiency. Power rating (BHP) does not include drive losses. Performance ratings do not include the effects of appurtenances in the airstream. NOTE: Ratings shown apply also to model QBCS.

CLASS 1 | CLASS 2 | CLASS 3

BCS-365 SINGLE WIDTH

CONSTANT SPEED PERFORMANCE CURVES

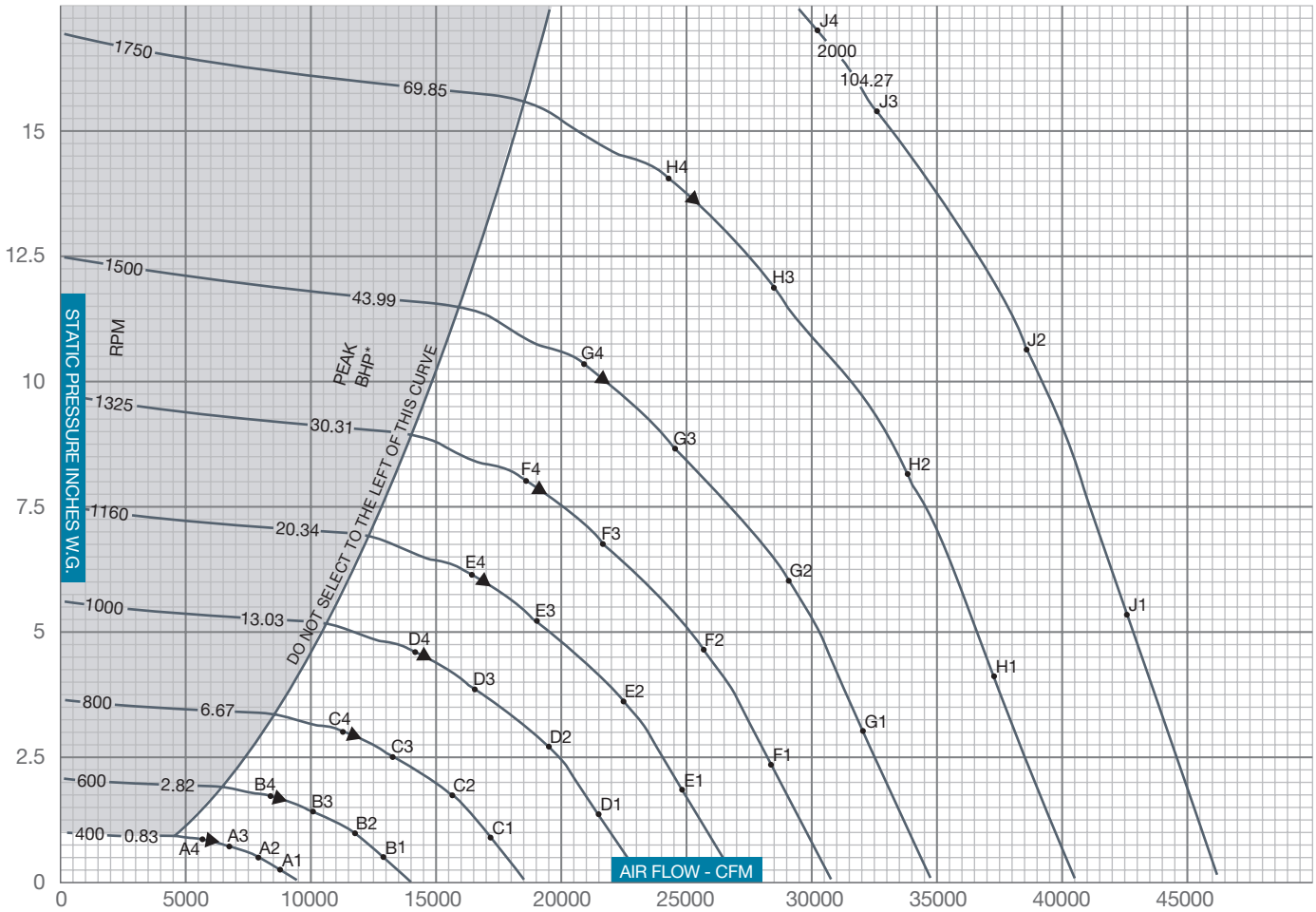

▲ PEAK STATIC EFFICIENCY
* Peak BHP does not include drive losses

$$\% \text{ STATIC EFFICIENCY} = \frac{\text{CFM x SP x .0157}}{\text{BHP}}$$

$$\text{Outlet Velocity (OV) in feet per minute} = \frac{\text{CFM}}{\text{Outlet Area}}$$

SOUND POWER LEVELS x 10^{-12} WATT

The sound power level ratings shown are in decibels, referred to 10^{-12} watts calculated per AMCA Standard 301. Values shown are for inlet L_{wi} sound power levels for installation Type B, free inlet, ducted outlet. Ratings do not include the effects of duct end correction.

FAN RPM	FAN SP	SOUND POINT	BAND / FREQUENCY 1 / 63	2 / 125	3 / 250	4 / 500	5 / 1000	6 / 2000	7 / 4000	8 / 8000
400	0.25	A1	74	66	67	64	64	53	42	31
	0.43	A2	71	65	65	62	61	52	42	33
	0.62	A3	70	63	64	61	60	52	44	36
	0.73	A4	67	62	62	60	58	51	45	38
600	0.48	B1	79	81	76	75	74	69	58	46
	0.96	B2	76	78	74	72	71	66	57	47
	1.39	B3	76	77	73	72	70	66	57	49
	1.65	B4	75	75	72	70	68	64	57	51
800	0.85	C1	81	92	83	83	79	80	68	57
	1.70	C2	80	89	81	80	77	76	67	57
	2.47	C3	79	88	80	79	76	75	67	59
	2.93	C4	79	86	79	78	75	73	66	60
1000	1.33	D1	87	95	90	88	85	85	77	66
	2.66	D2	85	93	88	86	82	82	75	65
	3.87	D3	85	92	87	84	82	81	74	66
	4.57	D4	86	90	85	83	81	79	73	67
1160	1.79	E1	92	96	96	91	89	88	82	71
	3.58	E2	91	94	93	89	86	85	80	71
	5.20	E3	92	93	92	88	86	84	79	71
	6.15	E4	93	92	91	86	85	83	78	71

FAN RPM	FAN SP	SOUND POINT	BAND / FREQUENCY 1 / 63	2 / 125	3 / 250	4 / 500	5 / 1000	6 / 2000	7 / 4000	8 / 8000
1325	2.33	F1	97	98	101	94	92	91	87	76
	4.67	F2	96	96	98	92	90	88	85	75
	6.79	F3	97	95	97	91	89	87	84	76
	8.03	F4	98	95	95	90	88	86	82	76
1500	2.99	G1	102	98	106	97	96	93	92	81
	5.98	G2	101	97	103	95	93	91	89	80
	8.70	G3	103	96	102	93	92	90	88	80
	10.29	G4	103	96	100	92	91	89	86	79
1750	4.07	H1	108	100	111	100	100	96	98	87
	8.14	H2	107	99	107	98	98	94	94	85
	11.84	H3	109	98	106	97	96	93	93	85
	14.00	H4	110	99	104	96	95	93	91	84
2000	5.32	J1	110	105	112	105	103	100	100	92
	10.63	J2	109	104	109	103	101	98	97	90
	15.47	J3	112	104	108	102	99	97	96	90
	17.00	J4	112	105	107	101	98	96	94	89

BCS-402 SINGLE WIDTH

WHEEL DIAMETER: 40.25"
WHEEL CIRCUMFERENCE: 10.54'
OUTLET AREA: 8.937 SQ. FT.
OUTLET SIZE: 31 15/16" X 40 5/16"
INLET DIAMETER: 41½" O.D.

MAX SPEEDS	CLASS 1	CLASS 2	CLASS 3
Up to 250°F	1044	1362	1826
251°F to 400°F*	992	1294	1735
401°F to 700°F*	856	1117	1497
Above 700°F	CONTACT FACTORY		

*Special hi-temp construction required
Tip Speed (fpm) = 10.54 x RPM
Max BHP = 21.254 x $(RPM/1000)^3$

		0.25" SP		0.50" SP		0.75" SP		1.00" SP		1.50" SP		2.00" SP		2.50" SP		3.00" SP		3.50" SP	
CFM	OV	RPM	BHP	RPM	BHP	RPM	BHP	RPM	BHP	RPM	BHP	RPM	BHP	RPM	BHP	RPM	BHP	RPM	BHP
7138	800	277	0.43	328	0.75	372	1.09	418	1.50	496	2.31								
8031	900	302	0.54	346	0.87	388	1.24	427	1.64	505	2.57	570	3.48						
8923	1000	327	0.67	366	1.01	405	1.41	442	1.83	514	2.79	579	3.82						
9815	1100	353	0.82	386	1.17	423	1.60	459	2.04	523	3.01	588	4.14	646	5.26	698	6.38		
10708	1200	379	0.99	409	1.36	443	1.80	475	2.28	537	3.28	598	4.43	655	5.69	707	6.89	755	8.11
11600	1300	405	1.19	433	1.59	463	2.03	494	2.54	554	3.60	607	4.72	664	6.04	716	7.42	764	8.71
12493	1400	432	1.41	459	1.85	483	2.29	514	2.82	570	3.94	623	5.11	674	6.40	725	7.83	773	9.33
13385	1500	459	1.66	484	2.14	508	2.60	534	3.13	588	4.31	639	5.53	686	6.82	735	8.26	782	9.81
14277	1600	487	1.94	510	2.46	533	2.95	555	3.47	607	4.70	656	5.99	702	7.32	745	8.72	792	10.31
15170	1700	514	2.26	536	2.82	558	3.34	579	3.87	627	5.12	673	6.47	718	7.86	761	9.30	801	10.83
16062	1800	542	2.61	563	3.20	584	3.76	603	4.32	647	5.57	692	6.98	735	8.43	777	9.93	816	11.47
16954	1900	569	3.00	590	3.62	609	4.23	629	4.81	667	6.06	711	7.52	752	9.04	793	10.59	832	12.18
17847	2000	597	3.43	617	4.08	635	4.74	654	5.34	688	6.59	731	8.10	771	9.67	810	11.28	848	12.93
18739	2100	625	3.90	644	4.58	662	5.29	680	5.92	713	7.22	751	8.71	791	10.34	827	12.02	865	13.72
19631	2200	653	4.42	671	5.13	688	5.86	705	6.55	738	7.90	772	9.37	810	11.05	846	12.78	882	14.55

		4.00" SP		4.50" SP		5.00" SP		5.50" SP		6.00" SP		6.50" SP		7.00" SP		7.50" SP		8.00" SP	
CFM	OV	RPM	BHP	RPM	BHP	RPM	BHP	RPM	BHP	RPM	BHP	RPM	BHP	RPM	BHP	RPM	BHP	RPM	BHP
16062	1800	855	13.12	896	14.94	936	16.80	973	18.71	1009	20.58	1044	22.36	1077	24.16	1109	25.99	1141	27.85
16954	1900	868	13.82	906	15.60	945	17.51	982	19.47	1018	21.48	1053	23.51	1086	25.38	1118	27.28	1149	29.19
17847	2000	884	14.63	918	16.36	955	18.25	992	20.26	1028	22.32	1062	24.43	1095	26.57	1127	28.59	1158	30.57
18739	2100	901	15.47	934	17.26	967	19.08	1001	21.07	1037	23.18	1071	25.34	1104	27.54	1136	29.78	1167	31.99
19631	2200	917	16.35	951	18.19	983	20.07	1013	21.99	1046	24.07	1081	26.27	1114	28.52	1145	30.81	1176	33.14
20524	2300	934	17.28	967	19.18	999	21.11	1030	23.08	1059	25.08	1090	27.24	1123	29.54	1155	31.88	1186	34.26
21416	2400	951	18.25	984	20.20	1015	22.19	1046	24.21	1075	26.27	1103	28.36	1133	30.58	1164	32.97	1195	35.40
22308	2500	969	19.26	1001	21.28	1032	23.32	1062	25.39	1091	27.50	1119	29.64	1146	31.82	1174	34.09	1205	36.57
23201	2600	989	20.31	1018	22.39	1049	24.49	1079	26.62	1108	28.79	1135	30.98	1162	33.21	1188	35.47	1214	37.77
24093	2700	1009	21.41	1038	23.54	1066	25.72	1095	27.90	1124	30.12	1152	32.37	1179	34.65	1205	36.96	1230	39.30
24986	2800	1028	22.56	1057	24.75	1085	26.98	1112	29.24	1141	31.51	1168	33.81	1195	36.15	1221	38.51	1246	40.91
25878	2900	1049	23.77	1077	26.01	1104	28.29	1131	30.61	1158	32.95	1185	35.31	1211	37.70	1237	40.12	1262	42.56
26770	3000	1069	25.03	1097	27.33	1124	29.66	1150	32.03	1175	34.44	1202	36.86	1228	39.31	1254	41.78	1279	44.28
27663	3100	1089	26.35	1117	28.70	1144	31.09	1170	33.51	1195	35.97	1219	38.47	1245	40.97	1270	43.50	1295	46.05
28555	3200	1110	27.73	1137	30.13	1164	32.57	1189	35.05	1214	37.56	1238	40.11	1262	42.70	1287	45.28	1312	47.89
29447	3300	1132	29.25	1158	31.62	1184	34.12	1209	36.65	1234	39.22	1258	41.82	1281	44.46	1304	47.12	1328	49.79
30340	3400	1157	30.93	1178	33.18	1204	35.73	1229	38.31	1254	40.93	1277	43.59	1301	46.28	1323	49.00	1345	51.75
31232	3500	1182	32.69	1201	34.90	1225	37.40	1250	40.04	1274	42.72	1297	45.43	1320	48.17	1342	50.94	1364	53.75
32124	3600	1207	34.53	1226	36.79	1245	39.14	1270	41.84	1294	44.57	1317	47.33	1340	50.12	1362	52.95	1384	55.81
33017	3700	1232	36.46	1250	38.76	1269	41.10	1290	43.70	1314	46.48	1337	49.30	1360	52.15	1382	55.03	1403	57.94

		9.00" SP		10.00" SP		11.00" SP		12.00" SP		13.00" SP		14.00" SP		15.00" SP		16.00" SP		17.00" SP	
CFM	OV	RPM	BHP	RPM	BHP	RPM	BHP	RPM	BHP	RPM	BHP	RPM	BHP	RPM	BHP	RPM	BHP	RPM	BHP
22308	2500	1263	41.65	1319	46.88	1372	52.24	1423	57.23	1472	62.21	1519	67.26	1565	72.37				
23201	2600	1273	42.96	1328	48.28	1381	53.75	1432	59.35	1481	64.48	1528	69.66	1574	74.91	1618	80.21		
24093	2700	1282	44.29	1338	49.72	1391	55.28	1441	60.98	1490	66.80	1537	72.11	1582	77.48	1627	82.92	1669	88.42
24986	2800	1294	45.78	1347	51.18	1400	56.85	1451	62.65	1499	68.58	1546	74.61	1591	80.11	1635	85.68	1678	91.31
25878	2900	1310	47.54	1357	52.68	1409	58.46	1460	64.36	1508	70.38	1555	76.53	1600	82.79	1644	88.48	1687	94.24
26770	3000	1326	49.37	1372	54.56	1419	60.09	1469	66.09	1518	72.22	1564	78.47	1610	84.84	1653	91.32	1696	97.23
27663	3100	1343	51.25	1388	56.55	1431	61.96	1479	67.87	1527	74.10	1574	80.45	1619	86.92	1662	93.50	1705	100.19
28555	3200	1359	53.19	1404	58.60	1447	64.11	1489	69.72	1537	76.01	1583	82.47	1628	89.03	1672	95.72	1714	102.51
29447	3300	1376	55.20	1421	60.71	1464	66.33	1505	72.04	1546	77.96	1593	84.52	1638	91.19	1681	97.97	1723	104.86
30340	3400	1392	57.27	1437	62.89	1480	68.61	1521	74.44	1561	80.35	1602	86.61	1647	93.38	1691	100.27	1733	107.26
31232	3500	1409	59.40	1454	65.14	1496	70.97	1537	76.89	1577	82.92	1615	89.03	1657	95.61	1700	102.60	1742	109.70
32124	3600	1426	61.61	1470	67.45	1513	73.39	1554	79.42	1593	85.55	1631	91.77	1668	98.08	1710	104.98	1752	112.18
33017	3700	1444	63.85	1487	69.83	1529	75.88	1570	82.02	1609	88.26	1647	94.58	1684	101.00	1720	107.50	1761	114.70
33909	3800	1464	66.16	1504	72.29	1546	78.44	1587	84.70	1626	91.04	1664	97.47	1700	103.99	1736	110.59	1771	117.28
34801	3900	1483	68.54	1523	74.78	1563	81.08	1603	87.44	1642	93.89	1680	100.43	1717	107.05	1752	113.76	1787	120.56

Performance shown is for installation type B & D - Free or ducted inlet, Ducted outlet. Underlined ratings indicate maximum static efficiency. Power rating (BHP) does not include drive losses. Performance ratings do not include the effects of appurtenances in the airstream. NOTE: Ratings shown apply also to model QBCS.

CLASS 1	CLASS 2	CLASS 3

BCS-402 SINGLE WIDTH

CONSTANT SPEED PERFORMANCE CURVES

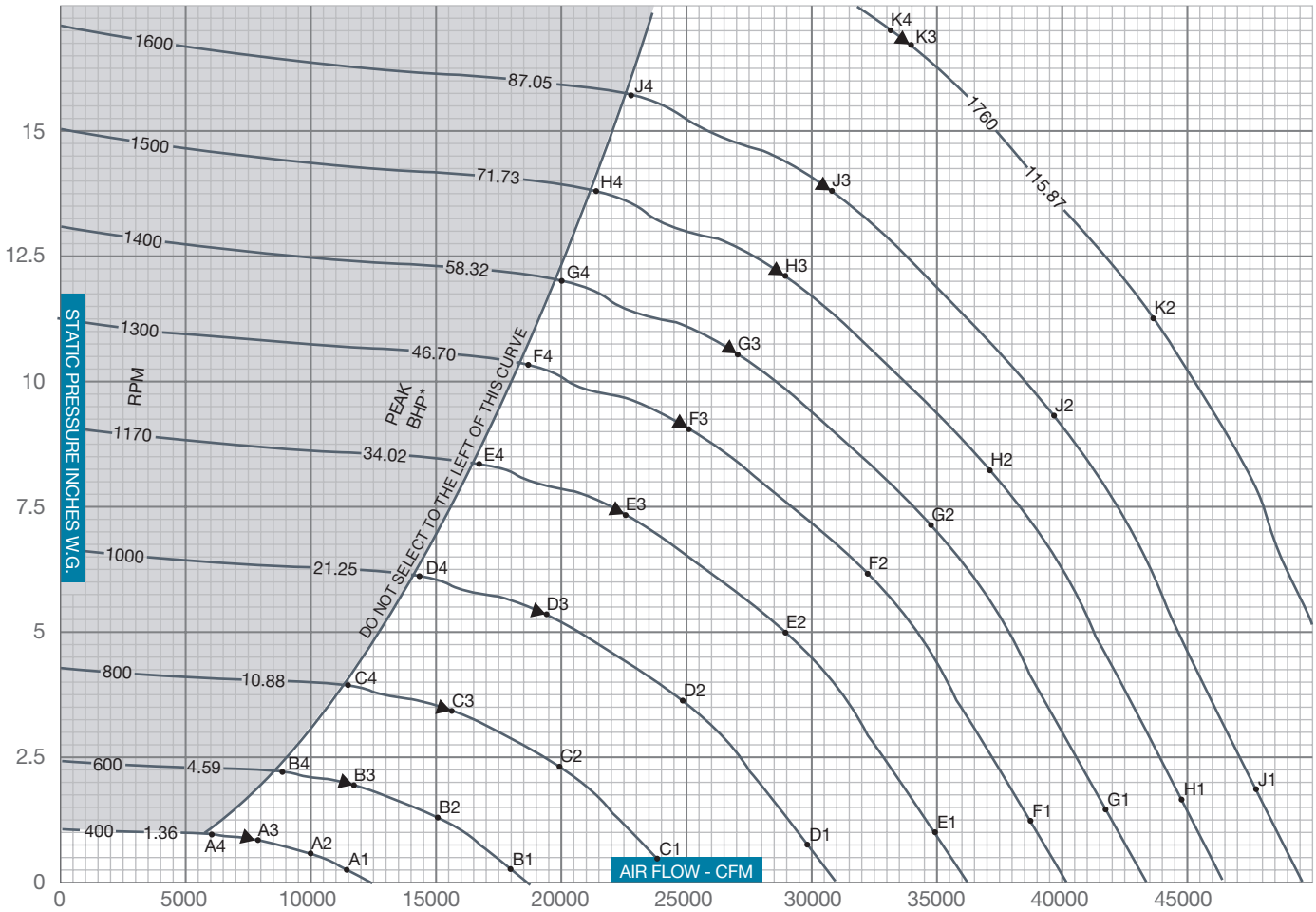

▲ PEAK STATIC EFFICIENCY
* Peak BHP does not include drive losses

$$\% \text{ STATIC EFFICIENCY} = \frac{\text{CFM x SP x .0157}}{\text{BHP}}$$

$$\text{Outlet Velocity (OV) in feet per minute} = \frac{\text{CFM}}{\text{Outlet Area}}$$

SOUND POWER LEVELS x 10^{-12} WATT

The sound power level ratings shown are in decibels, referred to 10^{-12} watts calculated per AMCA Standard 301. Values shown are for inlet L_{wi} sound power levels for installation Type B, free inlet, ducted outlet. Ratings do not include the effects of duct end correction.

FAN RPM	FAN SP	SOUND POINT	BAND / FREQUENCY 1 / 63	2 / 125	3 / 250	4 / 500	5 / 1000	6 / 2000	7 / 4000	8 / 8000
400	0.25	A1	82	74	73	74	69	61	53	46
	0.58	A2	79	72	69	69	65	58	52	46
	0.86	A3	76	71	66	67	63	57	51	45
	0.98	A4	76	74	68	70	66	58	51	45
600	0.26	B1	90	90	84	85	83	76	68	60
	1.31	B2	87	86	80	78	77	71	64	58
	1.94	B3	86	84	78	76	74	69	63	57
	2.21	B4	91	86	81	78	77	71	64	57
800	0.47	C1	94	101	91	91	91	86	77	69
	2.33	C2	93	96	88	85	84	80	73	67
	3.45	C3	94	94	87	81	82	78	72	66
	3.92	C4	101	94	90	84	85	81	73	67
1000	0.73	D1	98	105	99	96	96	93	85	77
	3.65	D2	97	101	96	91	89	87	80	74
	5.40	D3	98	100	94	88	87	84	79	73
	6.13	D4	106	102	97	90	89	87	81	74
1170	1.00	E1	101	108	105	99	99	97	90	82
	4.99	E2	100	105	102	95	93	91	85	78
	7.39	E3	101	104	99	93	90	89	84	77
	8.39	E4	108	108	101	95	92	91	86	79

FAN RPM	FAN SP	SOUND POINT	BAND / FREQUENCY 1 / 63	2 / 125	3 / 250	4 / 500	5 / 1000	6 / 2000	7 / 4000	8 / 8000
1300	1.23	F1	103	109	109	101	101	100	94	85
	6.16	F2	102	107	105	98	95	94	89	82
	9.12	F3	103	106	103	96	92	92	87	80
	10.35	F4	110	112	104	99	95	94	89	82
1400	1.43	G1	104	110	112	103	103	102	97	88
	7.15	G2	103	108	108	100	97	96	91	84
	10.58	G3	104	108	105	98	94	94	89	83
	12.01	G4	112	114	107	101	96	96	92	84
1500	1.64	H1	105	111	115	104	104	104	99	90
	8.20	H2	104	110	110	102	98	98	93	86
	12.14	H3	105	110	108	100	95	95	91	85
	13.78	H4	113	117	109	103	97	98	94	86
1600	1.87	J1	106	112	117	106	106	106	101	92
	9.34	J2	105	111	113	104	100	99	95	88
	13.82	J3	106	112	110	102	96	97	93	87
	15.68	J4	114	119	110	105	99	100	96	88
1760	2.26	K1	108	114	119	109	108	108	104	96
	11.30	K2	107	113	115	107	102	102	98	91
	16.72	K3	108	114	112	105	99	99	96	90
	17.00	K4	109	115	112	105	99	99	96	90

BCS-445 SINGLE WIDTH

WHEEL DIAMETER: 44.50"
WHEEL CIRCUMFERENCE: 11.65'
OUTLET AREA: 10.923 SQ. FT.
OUTLET SIZE: 35 5/16" X 44 9/16"
INLET DIAMETER: 45 1/2" O.D.

MAX SPEEDS	CLASS 1	CLASS 2	CLASS 3
Up to 250°F	944	1232	1652
251°F to 400°F*	897	1170	1569
401°F to 700°F*	774	1010	1355
Above 700°F	CONTACT FACTORY		

*Special hi-temp construction required
Tip Speed (fpm) = 11.65 x RPM
Max BHP = 35.109 x $(RPM/1000)^3$

		0.25" SP		0.50" SP		0.75" SP		1.00" SP		1.50" SP		2.00" SP		2.50" SP		3.00" SP		3.50" SP	
CFM	OV	RPM	BHP	RPM	BHP	RPM	BHP	RPM	BHP	RPM	BHP	RPM	BHP	RPM	BHP	RPM	BHP	RPM	BHP
8726	800	251	0.53	297	0.91	337	1.33	378	1.83	448	2.83								
9816	900	273	0.66	313	1.07	351	1.52	387	2.00	456	3.14	516	4.25						
10907	1000	296	0.82	331	1.24	366	1.72	400	2.23	465	3.41	524	4.67						
11998	1100	319	1.00	349	1.43	383	1.95	415	2.50	473	3.68	532	5.06	584	6.43	632	7.80		
13089	1200	343	1.22	370	1.67	401	2.21	430	2.79	486	4.01	540	5.41	592	6.95	640	8.42	683	9.92
14179	1300	367	1.45	392	1.95	419	2.49	447	3.10	501	4.40	549	5.77	601	7.38	648	9.07	691	10.64
15270	1400	391	1.72	415	2.26	437	2.80	465	3.45	516	4.81	563	6.25	609	7.82	656	9.57	699	11.40
16361	1500	415	2.03	438	2.62	459	3.18	483	3.82	532	5.26	578	6.77	620	8.34	665	10.10	708	11.99
17452	1600	440	2.37	462	3.01	482	3.61	502	4.24	549	5.74	593	7.32	635	8.95	673	10.65	716	12.60
18542	1700	465	2.76	485	3.45	505	4.08	523	4.73	567	6.25	608	7.91	650	9.61	688	11.37	725	13.23
19633	1800	490	3.19	509	3.92	528	4.60	546	5.28	585	6.81	626	8.53	665	10.31	703	12.14	738	14.02
20724	1900	515	3.67	533	4.43	551	5.17	569	5.88	604	7.41	643	9.19	680	11.04	718	12.94	752	14.89
21815	2000	540	4.19	558	4.99	575	5.79	591	6.53	623	8.06	661	9.90	697	11.82	733	13.79	767	15.81
22905	2100	565	4.77	582	5.60	598	6.46	615	7.24	645	8.83	680	10.65	715	12.64	748	14.69	782	16.77
23996	2200	590	5.40	607	6.27	623	7.16	638	8.01	667	9.65	698	11.45	733	13.50	766	15.62	797	17.79

		4.00" SP		4.50" SP		5.00" SP		5.50" SP		6.00" SP		6.50" SP		7.00" SP		7.50" SP		8.00" SP	
CFM	OV	RPM	BHP	RPM	BHP	RPM	BHP	RPM	BHP	RPM	BHP	RPM	BHP	RPM	BHP	RPM	BHP	RPM	BHP
19633	1800	773	16.04	811	18.26	846	20.53	880	22.87	913	25.15	944	27.33	974	29.54	1003	31.77	1032	34.04
20724	1900	785	16.90	819	19.06	855	21.40	889	23.80	921	26.26	952	28.74	982	31.02	1011	33.34	1040	35.68
21815	2000	800	17.88	831	20.00	863	22.30	897	24.76	929	27.28	960	29.86	990	32.48	1019	34.95	1048	37.37
22905	2100	815	18.91	845	21.09	874	23.33	906	25.75	938	28.34	969	30.97	999	33.66	1028	36.40	1056	39.10
23996	2200	829	19.99	860	22.24	889	24.54	917	26.88	947	29.42	977	32.12	1007	34.86	1036	37.66	1064	40.51
25087	2300	845	21.12	875	23.44	904	25.80	931	28.21	958	30.66	986	33.29	1016	36.10	1045	38.97	1072	41.88
26178	2400	860	22.31	890	24.69	918	27.12	946	29.59	972	32.11	998	34.66	1024	37.37	1053	40.30	1081	43.27
27268	2500	877	23.54	905	26.01	933	28.50	961	31.04	987	33.62	1012	36.23	1037	38.89	1062	41.67	1089	44.70
28359	2600	894	24.82	921	27.37	949	29.94	976	32.54	1002	35.18	1027	37.87	1051	40.59	1075	43.35	1098	46.17
29450	2700	912	26.17	939	28.78	964	31.44	991	34.11	1017	36.82	1042	39.57	1066	42.35	1089	45.18	1112	48.04
30541	2800	930	27.58	956	30.25	981	32.98	1006	35.74	1032	38.51	1057	41.33	1081	44.18	1104	47.07	1127	50.00
31631	2900	948	29.05	974	31.79	999	34.58	1023	37.42	1047	40.28	1072	43.16	1096	46.08	1119	49.03	1142	52.03
32722	3000	967	30.60	992	33.40	1017	36.25	1040	39.15	1063	42.10	1087	45.06	1111	48.04	1134	51.07	1156	54.12
33813	3100	985	32.21	1010	35.08	1035	38.00	1058	40.96	1081	43.97	1103	47.02	1126	50.08	1149	53.17	1171	56.29
34904	3200	1004	33.89	1029	36.83	1053	39.81	1076	42.84	1098	45.92	1120	49.03	1141	52.19	1164	55.35	1186	58.54
35994	3300	1024	35.76	1047	38.65	1071	41.70	1094	44.80	1116	47.94	1138	51.12	1159	54.34	1179	57.60	1202	60.86
37085	3400	1047	37.81	1066	40.55	1089	43.67	1112	46.83	1134	50.04	1155	53.28	1176	56.57	1197	59.90	1217	63.25
38176	3500	1069	39.96	1086	42.66	1108	45.72	1130	48.94	1152	52.21	1173	55.53	1194	58.88	1214	62.27	1234	65.70
39267	3600	1092	42.21	1109	44.97	1126	47.84	1149	51.14	1170	54.47	1191	57.85	1212	61.27	1232	64.72	1251	68.22
40357	3700	1114	44.56	1131	47.38	1147	50.24	1167	53.42	1189	56.82	1210	60.26	1230	63.74	1250	67.26	1269	70.82

		9.00" SP		10.00" SP		11.00" SP		12.00" SP		13.00" SP		14.00" SP		15.00" SP		16.00" SP		17.00" SP	
CFM	OV	RPM	BHP	RPM	BHP	RPM	BHP	RPM	BHP	RPM	BHP	RPM	BHP	RPM	BHP	RPM	BHP	RPM	BHP
27268	2500	1143	50.91	1193	57.30	1241	63.86	1287	69.95	1331	76.04	1374	82.21	1415	88.47				
28359	2600	1151	52.51	1201	59.02	1249	65.70	1295	72.54	1339	78.82	1382	85.15	1423	91.56	1463	98.05		
29450	2700	1160	54.13	1210	60.77	1258	67.58	1304	74.54	1347	81.65	1390	88.14	1431	94.71	1471	101.36	1510	108.08
30541	2800	1171	55.96	1219	62.56	1266	69.49	1312	76.58	1356	83.83	1398	91.19	1439	97.92	1479	104.73	1518	111.61
31631	2900	1185	58.11	1227	64.40	1275	71.45	1320	78.66	1364	86.03	1407	93.55	1447	101.19	1487	108.16	1526	115.20
32722	3000	1200	60.34	1241	66.69	1283	73.45	1329	80.79	1373	88.28	1415	95.92	1456	103.70	1495	111.62	1534	118.85
33813	3100	1214	62.64	1255	69.12	1295	75.73	1338	82.96	1381	90.57	1424	98.34	1464	106.24	1504	114.29	1542	122.46
34904	3200	1229	65.02	1270	71.63	1309	78.36	1347	85.22	1390	92.91	1432	100.80	1473	108.83	1512	117.00	1550	125.30
35994	3300	1244	67.47	1285	74.21	1324	81.08	1361	88.06	1399	95.29	1441	103.31	1481	111.46	1521	119.75	1559	128.18
37085	3400	1259	70.00	1300	76.87	1339	83.87	1376	90.98	1412	98.22	1449	105.86	1490	114.14	1529	122.56	1567	131.11
38176	3500	1274	72.61	1315	79.62	1353	86.74	1391	93.99	1426	101.35	1461	108.83	1498	116.87	1538	125.41	1576	134.09
39267	3600	1290	75.30	1330	82.44	1368	89.70	1405	97.08	1441	104.57	1476	112.17	1509	119.89	1546	128.32	1584	137.12
40357	3700	1307	78.05	1345	85.36	1383	92.75	1420	100.26	1456	107.88	1490	115.61	1523	123.45	1556	131.39	1593	140.20
41448	3800	1324	80.87	1360	88.36	1398	95.89	1435	103.53	1471	111.28	1505	119.14	1538	127.11	1570	135.18	1602	143.35
42539	3900	1342	83.78	1377	91.41	1414	99.11	1450	106.88	1485	114.77	1520	122.76	1553	130.86	1585	139.06	1616	147.36

Performance shown is for installation type B & D - Free or ducted inlet, Ducted outlet. Underlined ratings indicate maximum static efficiency. Power rating (BHP) does not include drive losses. Performance ratings do not include the effects of appurtenances in the airstream. NOTE: Ratings shown apply also to model QBCS.

CLASS 1 | CLASS 2 | CLASS 3

BCS-445 SINGLE WIDTH

CONSTANT SPEED PERFORMANCE CURVES

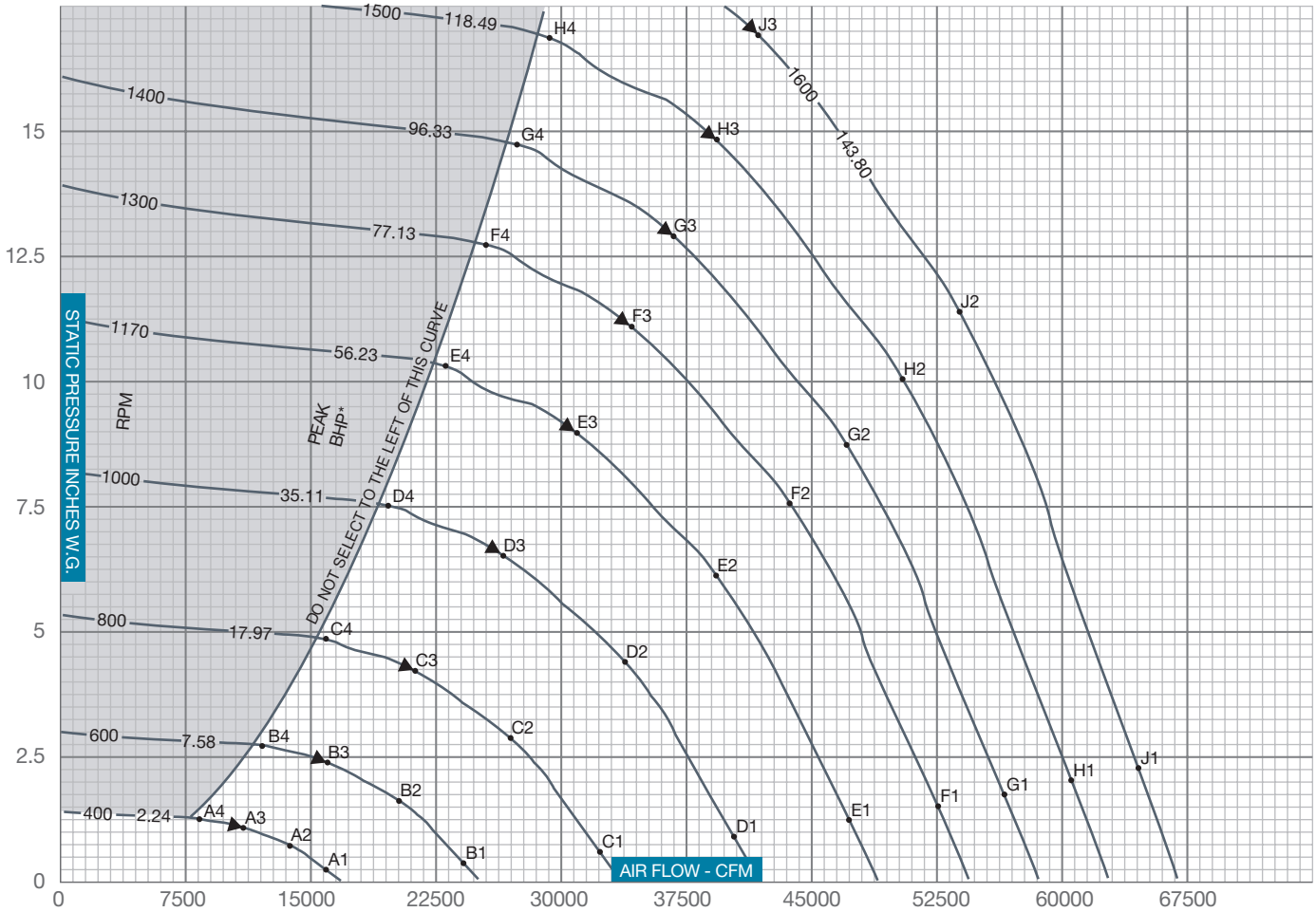

▲ PEAK STATIC EFFICIENCY
* Peak BHP does not include drive losses

$$\% \text{ STATIC EFFICIENCY} = \frac{\text{CFM x SP x .0157}}{\text{BHP}}$$

$$\text{Outlet Velocity (OV) in feet per minute} = \frac{\text{CFM}}{\text{Outlet Area}}$$

SOUND POWER LEVELS x 10^{-12} WATT

The sound power level ratings shown are in decibels, referred to 10^{-12} watts calculated per AMCA Standard 301. Values shown are for inlet L_{wi} sound power levels for installation Type B, free inlet, ducted outlet. Ratings do not include the effects of duct end correction.

FAN RPM	FAN SP	SOUND POINT	BAND / FREQUENCY 1 / 63	2 / 125	3 / 250	4 / 500	5 / 1000	6 / 2000	7 / 4000	8 / 8000
400	0.25	A1	86	78	78	78	73	64	57	49
	0.71	A2	82	76	73	72	68	61	55	49
	1.06	A3	79	74	69	70	66	60	54	48
	1.20	A4	80	77	71	73	69	61	55	48
600	0.32	B1	94	93	87	88	86	79	71	63
	1.60	B2	91	90	84	82	80	74	67	61
	2.37	B3	90	88	81	79	77	72	66	60
	2.70	B4	94	89	84	81	80	75	67	60
800	0.57	C1	98	104	94	94	94	89	80	72
	2.85	C2	97	100	91	88	87	83	76	70
	4.22	C3	97	97	90	84	85	81	75	69
	4.79	C4	105	98	93	87	88	84	76	70
1000	0.89	D1	102	109	102	99	99	96	88	80
	4.46	D2	101	105	99	94	92	90	83	77
	6.60	D3	102	103	97	91	90	88	82	76
	7.49	D4	109	105	100	93	92	90	84	77
1170	1.22	E1	104	111	108	102	102	100	93	85
	6.10	E2	103	108	105	98	96	94	88	81
	9.03	E3	104	107	103	96	93	92	87	80
	10.25	E4	112	111	104	98	96	94	89	82

FAN RPM	FAN SP	SOUND POINT	BAND / FREQUENCY 1 / 63	2 / 125	3 / 250	4 / 500	5 / 1000	6 / 2000	7 / 4000	8 / 8000
1300	1.51	F1	106	112	112	104	104	103	97	89
	7.53	F2	105	110	108	101	98	97	92	85
	11.15	F3	106	110	106	99	95	95	90	84
	12.66	F4	114	115	107	102	98	97	92	85
1400	1.75	G1	107	113	115	106	106	105	100	91
	8.74	G2	106	112	111	103	100	99	94	87
	12.93	G3	107	112	108	101	97	97	92	86
	14.68	G4	115	118	110	104	99	99	95	87
1500	2.01	H1	109	114	118	108	107	107	102	93
	10.03	H2	108	113	113	105	101	101	96	89
	14.84	H3	109	113	111	103	98	98	94	88
	16.85	H4	116	120	112	106	100	101	97	89
1600	2.28	J1	110	115	120	109	109	109	104	95
	11.41	J2	109	114	116	107	103	103	98	91
	16.89	J3	110	115	113	105	99	100	96	90

BCS-490 SINGLE WIDTH

WHEEL DIAMETER: 49.00"
WHEEL CIRCUMFERENCE: 12.83'
OUTLET AREA: 13.240 SQ. FT.
OUTLET SIZE: 38⅞" X 49¹⁄₁₆"
INLET DIAMETER: 51½" O.D.

MAX SPEEDS	CLASS 1	CLASS 2	CLASS 3
Up to 250°F	858	1119	1500
251°F to 400°F*	815	1063	1425
401°F to 700°F*	704	918	1230
Above 700°F	CONTACT FACTORY		

*Special hi-temp construction required
Tip Speed (fpm) = 12.83 x RPM
Max BHP = 56.832 x (RPM/1000)³

		0.25" SP		0.50" SP		0.75" SP		1.00" SP		1.50" SP		2.00" SP		2.50" SP		3.00" SP		3.50" SP	
CFM	OV	RPM	BHP	RPM	BHP	RPM	BHP	RPM	BHP	RPM	BHP	RPM	BHP	RPM	BHP	RPM	BHP	RPM	BHP
10580	800	228	0.64	269	1.11	306	1.61	343	2.22	407	3.43								
11902	900	248	0.80	284	1.29	319	1.84	351	2.43	414	3.81	468	5.16						
13225	1000	269	0.99	300	1.50	333	2.09	363	2.71	422	4.14	476	5.66						
14547	1100	290	1.21	317	1.74	348	2.37	377	3.03	430	4.46	483	6.14	531	7.80	574	9.46		
15870	1200	311	1.47	336	2.02	364	2.67	390	3.38	441	4.87	491	6.56	538	8.43	581	10.21	620	12.02
17192	1300	333	1.76	356	2.36	380	3.02	406	3.76	455	5.33	499	7.00	546	8.94	588	10.99	628	12.90
18515	1400	355	2.09	377	2.74	397	3.39	422	4.18	469	5.84	512	7.58	553	9.48	596	11.61	635	13.82
19837	1500	377	2.46	398	3.17	417	3.86	439	4.64	483	6.38	525	8.20	563	10.11	603	12.24	643	14.54
21160	1600	400	2.88	419	3.65	438	4.37	456	5.14	499	6.96	539	8.87	577	10.86	612	12.92	650	15.28
22482	1700	422	3.35	441	4.19	458	4.95	475	5.73	515	7.58	553	9.59	590	11.65	625	13.79	658	16.04
23805	1800	445	3.87	462	4.75	479	5.58	496	6.40	531	8.26	568	10.34	604	12.50	638	14.71	670	17.00
25127	1900	468	4.45	484	5.37	501	6.27	516	7.13	548	8.98	584	11.14	618	13.39	652	15.69	683	18.06
26450	2000	490	5.08	507	6.05	522	7.02	537	7.92	565	9.77	601	12.00	633	14.33	665	16.72	697	19.17
27772	2100	513	5.78	529	6.79	544	7.83	558	8.78	586	10.70	617	12.91	649	15.32	679	17.81	710	20.34
29095	2200	536	6.55	551	7.60	565	8.69	579	9.71	606	11.71	634	13.89	666	16.37	695	18.94	724	21.57

		4.00" SP		4.50" SP		5.00" SP		5.50" SP		6.00" SP		6.50" SP		7.00" SP		7.50" SP		8.00" SP	
CFM	OV	RPM	BHP	RPM	BHP	RPM	BHP	RPM	BHP	RPM	BHP	RPM	BHP	RPM	BHP	RPM	BHP	RPM	BHP
23805	1800	702	19.45	736	22.13	769	24.90	799	27.73	829	30.50	857	33.14	885	35.81	911	38.52	937	41.27
25127	1900	713	20.49	744	23.11	776	25.95	807	28.86	836	31.84	865	34.84	892	37.62	918	40.42	944	43.26
26450	2000	726	21.68	754	24.25	784	27.04	815	30.03	844	33.08	872	36.20	899	39.38	926	42.37	951	45.31
27772	2100	740	22.93	768	25.58	794	28.28	823	31.23	852	34.36	880	37.55	907	40.81	933	44.13	959	47.41
29095	2200	753	24.24	781	26.97	807	29.75	832	32.59	860	35.67	888	38.94	915	42.27	941	45.67	966	49.12
30417	2300	767	25.61	794	28.42	821	31.28	846	34.20	870	37.17	896	40.36	923	43.77	949	47.24	974	50.77
31740	2400	781	27.05	808	29.94	834	32.88	859	35.88	883	38.93	906	42.03	930	45.32	956	48.86	982	52.47
33062	2500	796	28.54	822	31.53	848	34.56	872	37.63	896	40.76	919	43.93	942	47.16	964	50.52	989	54.20
34385	2600	812	30.10	836	33.19	861	36.30	886	39.46	910	42.66	933	45.91	955	49.22	976	52.56	997	55.98
35707	2700	829	31.73	852	34.89	875	38.12	900	41.35	923	44.64	946	47.97	968	51.35	989	54.78	1010	58.25
37030	2800	845	33.44	868	36.68	891	39.98	914	43.33	937	46.70	960	50.11	982	53.57	1003	57.07	1023	60.62
38352	2900	861	35.23	885	38.55	907	41.93	929	45.37	951	48.84	973	52.33	995	55.87	1016	59.45	1037	63.08
39675	3000	878	37.10	901	40.50	923	43.96	945	47.47	965	51.04	987	54.63	1009	58.25	1030	61.92	1050	65.62
40997	3100	895	39.05	918	42.53	940	46.07	961	49.66	981	53.31	1001	57.01	1023	60.72	1043	64.47	1064	68.25
42320	3200	912	41.09	934	44.65	956	48.27	977	51.94	997	55.67	1017	59.45	1036	63.28	1057	67.11	1077	70.97
43642	3300	930	43.35	951	46.86	973	50.56	993	54.32	1014	58.12	1033	61.98	1052	65.89	1071	69.84	1091	73.79
44965	3400	950	45.85	968	49.17	989	52.95	1010	56.78	1030	60.67	1049	64.60	1068	68.59	1087	72.62	1105	76.69
46287	3500	971	48.45	987	51.73	1006	55.43	1026	59.34	1046	63.31	1066	67.32	1084	71.39	1103	75.50	1121	79.66
47610	3600	991	51.18	1007	54.53	1023	58.01	1043	62.00	1063	66.05	1082	70.14	1101	74.29	1119	78.48	1136	82.71
48932	3700	1012	54.03	1027	57.45	1042	60.91	1060	64.77	1079	68.89	1098	73.07	1117	77.29	1135	81.56	1153	85.87

		9.00" SP		10.00" SP		11.00" SP		12.00" SP		13.00" SP		14.00" SP		15.00" SP		16.00" SP		17.00" SP	
CFM	OV	RPM	BHP	RPM	BHP	RPM	BHP	RPM	BHP	RPM	BHP	RPM	BHP	RPM	BHP	RPM	BHP	RPM	BHP
33062	2500	1038	61.73	1083	69.48	1127	77.43	1169	84.82	1209	92.20	1248	99.68	1285	107.26				
34385	2600	1045	63.66	1091	71.56	1135	79.66	1176	87.95	1216	95.56	1255	103.24	1293	111.01	1329	118.88		
35707	2700	1053	65.64	1099	73.68	1142	81.93	1184	90.38	1224	99.00	1262	106.87	1300	114.83	1336	122.89	1371	131.04
37030	2800	1063	67.85	1107	75.86	1150	84.26	1191	92.85	1231	101.64	1270	110.57	1307	118.73	1343	126.98	1378	135.32
38352	2900	1076	70.46	1114	78.08	1158	86.63	1199	95.38	1239	104.31	1277	113.42	1314	122.69	1351	131.14	1386	139.67
39675	3000	1089	73.16	1127	80.86	1166	89.06	1207	97.96	1247	107.04	1285	116.30	1322	125.74	1358	135.34	1393	144.10
40997	3100	1103	75.95	1140	83.81	1176	91.82	1215	100.58	1255	109.82	1293	119.23	1330	128.82	1366	138.57	1400	148.49
42320	3200	1116	78.83	1153	86.84	1189	95.01	1223	103.33	1262	112.65	1301	122.22	1337	131.95	1373	141.85	1408	151.92
43642	3300	1130	81.80	1167	89.98	1202	98.30	1236	106.77	1270	115.54	1308	125.26	1345	135.15	1381	145.20	1416	155.41
44965	3400	1144	84.87	1180	93.21	1216	101.69	1250	110.32	1282	119.09	1316	128.36	1353	138.40	1389	148.60	1423	158.97
46287	3500	1157	88.04	1194	96.53	1229	105.17	1263	113.96	1295	122.89	1327	131.95	1361	141.70	1396	152.06	1431	162.58
47610	3600	1171	91.31	1208	99.96	1243	108.76	1276	117.71	1309	126.79	1340	136.01	1370	145.36	1404	155.58	1439	166.25
48932	3700	1187	94.64	1221	103.49	1256	112.46	1290	121.56	1322	130.80	1353	140.17	1384	149.68	1413	159.31	1447	169.99
50255	3800	1202	98.06	1235	107.13	1270	116.26	1303	125.52	1335	134.92	1367	144.45	1397	154.11	1426	163.90	1455	173.81
51577	3900	1219	101.59	1251	110.83	1284	120.17	1317	129.59	1349	139.15	1380	148.84	1410	158.66	1439	168.60	1468	178.67

Performance shown is for installation type B & D - Free or ducted inlet, Ducted outlet. Underlined ratings indicate maximum static efficiency. Power rating (BHP) does not include drive losses. Performance ratings do not include the effects of appurtenances in the airstream.

CLASS 1 | CLASS 2 | CLASS 3

BCS-490 SINGLE WIDTH

CONSTANT SPEED PERFORMANCE CURVES

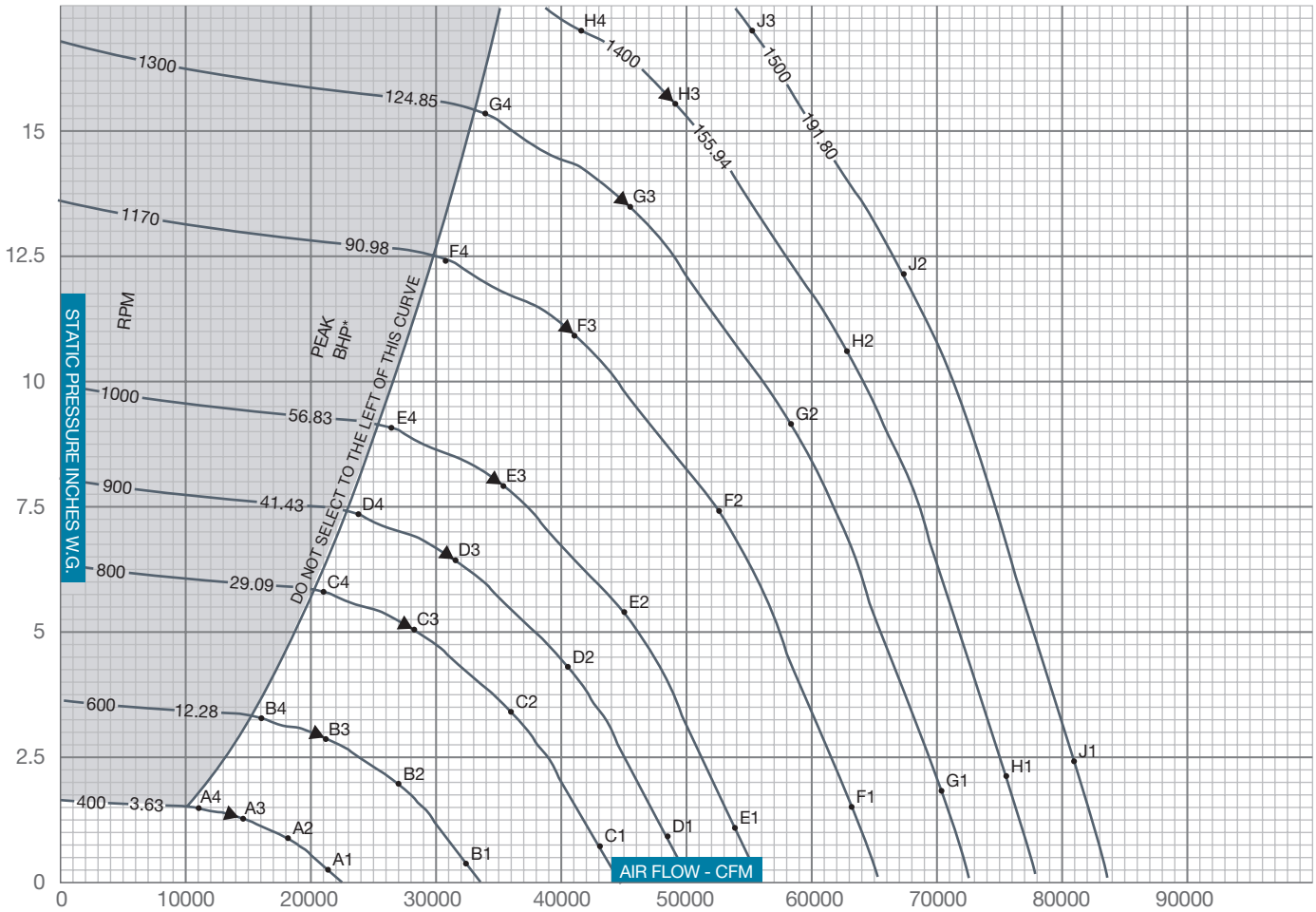

▲ PEAK STATIC EFFICIENCY
* Peak BHP does not include drive losses

$$\% \text{STATIC EFFICIENCY} = \frac{\text{CFM x SP x .0157}}{\text{BHP}}$$

$$\text{Outlet Velocity (OV) in feet per minute} = \frac{\text{CFM}}{\text{Outlet Area}}$$

SOUND POWER LEVELS x 10^{-12} WATT

The sound power level ratings shown are in decibels, referred to 10^{-12} watts calculated per AMCA Standard 301. Values shown are for inlet L_{wi} sound power levels for installation Type B, free inlet, ducted outlet. Ratings do not include the effects of duct end correction.

FAN RPM	FAN SP	SOUND POINT	BAND / FREQUENCY 1 / 63	2 / 125	3 / 250	4 / 500	5 / 1000	6 / 2000	7 / 4000	8 / 8000
400	0.25	A1	89	81	80	81	76	68	60	52
	0.86	A2	85	79	76	75	71	64	58	52
	1.28	A3	83	77	72	73	69	63	57	51
	1.45	A4	83	80	74	76	72	64	57	51
600	0.39	B1	97	96	90	91	89	82	74	66
	1.95	B2	94	93	87	84	82	77	70	64
	2.88	B3	93	91	84	82	80	75	69	63
	3.27	B4	98	92	87	84	83	77	70	63
800	0.69	C1	101	108	97	97	97	92	83	75
	3.46	C2	100	103	94	91	90	86	79	73
	5.12	C3	101	100	93	87	88	84	78	72
	5.81	C4	108	101	96	90	91	87	79	72
900	0.88	D1	103	110	101	99	99	96	87	79
	4.38	D2	102	106	98	94	93	90	83	76
	6.48	D3	103	103	97	91	91	88	81	75
	7.35	D4	111	105	100	93	93	90	83	76
1000	1.08	E1	105	112	105	102	102	99	91	83
	5.40	E2	104	108	102	97	95	93	86	80
	8.00	E3	105	106	100	94	93	90	85	79
	9.08	E4	113	109	103	96	95	93	87	80

FAN RPM	FAN SP	SOUND POINT	BAND / FREQUENCY 1 / 63	2 / 125	3 / 250	4 / 500	5 / 1000	6 / 2000	7 / 4000	8 / 8000
1170	1.48	F1	108	114	111	105	105	103	96	88
	7.40	F2	107	111	108	101	99	97	91	84
	10.95	F3	108	110	106	99	96	95	90	83
	12.43	F4	115	114	107	101	98	97	92	85
1300	1.83	G1	110	116	115	107	107	106	100	91
	9.13	G2	108	113	111	104	101	100	95	88
	13.52	G3	110	113	109	102	98	98	93	86
	15.34	G4	117	118	110	105	100	100	95	88
1400	2.12	H1	111	117	118	109	109	108	103	94
	10.59	H2	110	115	114	106	103	102	97	90
	15.68	H3	111	115	111	104	100	100	95	89
	17.00	H4	115	119	112	106	101	101	96	90
1500	2.43	J1	112	118	121	111	110	110	105	96
	12.16	J2	111	116	116	108	104	104	99	92
	17.00	J3	112	117	114	106	102	102	97	91

BCS-542 SINGLE WIDTH

WHEEL DIAMETER: 54.25"
WHEEL CIRCUMFERENCE: 14.20'
OUTLET AREA: 16.255 SQ. FT.
OUTLET SIZE: 43 1/16" X 54 3/8"
INLET DIAMETER: 56 3/4" O.D.

MAX SPEEDS	CLASS 1	CLASS 2	CLASS 3
Up to 250°F	775	1011	1355
251°F to 400°F*	736	960	1287
401°F to 700°F*	636	829	1111
Above 700°F	CONTACT FACTORY		

*Special hi-temp construction required
Tip Speed (fpm) = 14.20 x RPM
Max BHP = 94.539 x (RPM/1000)^3

		0.25" SP		0.50" SP		0.75" SP		1.00" SP		1.50" SP		2.00" SP		2.50" SP		3.00" SP		3.50" SP	
CFM	OV	RPM	BHP	RPM	BHP	RPM	BHP	RPM	BHP	RPM	BHP	RPM	BHP	RPM	BHP	RPM	BHP	RPM	BHP
12968	800	206	0.79	243	1.36	276	1.98	310	2.72	368	4.20								
14589	900	224	0.98	257	1.58	288	2.25	317	2.98	374	4.67	423	6.32						
16210	1000	243	1.21	271	1.84	300	2.56	328	3.32	381	5.07	430	6.94						
17831	1100	262	1.49	286	2.13	314	2.90	340	3.71	388	5.46	436	7.53	479	9.56	518	11.60		
19453	1200	281	1.81	303	2.48	329	3.28	353	4.15	399	5.96	443	8.04	486	10.33	525	12.52	560	14.74
21074	1300	301	2.16	322	2.89	343	3.70	367	4.61	411	6.54	450	8.58	493	10.96	531	13.48	567	15.82
22695	1400	321	2.56	340	3.36	359	4.16	382	5.12	423	7.16	462	9.29	500	11.62	538	14.23	573	16.94
24316	1500	341	3.02	359	3.89	377	4.73	396	5.68	436	7.82	474	10.05	509	12.39	545	15.01	580	17.82
25937	1600	361	3.53	379	4.48	395	5.36	412	6.30	450	8.53	487	10.87	521	13.31	552	15.83	587	18.73
27558	1700	381	4.10	398	5.13	414	6.06	429	7.02	465	9.30	499	11.75	533	14.28	564	16.90	594	19.67
29179	1800	402	4.74	418	5.82	433	6.84	448	7.84	480	10.12	513	12.67	545	15.32	576	18.04	605	20.84
30800	1900	422	5.45	438	6.58	452	7.68	466	8.73	495	11.01	528	13.66	558	16.41	589	19.23	617	22.13
32421	2000	443	6.23	458	7.42	471	8.61	485	9.70	511	11.97	543	14.71	572	17.56	601	20.50	629	23.50
34042	2100	464	7.09	478	8.33	491	9.60	504	10.76	529	13.12	557	15.83	587	18.78	614	21.83	642	24.93
35663	2200	484	8.02	498	9.32	511	10.65	523	11.90	547	14.35	573	17.02	601	20.07	628	23.22	654	26.44

		4.00" SP		4.50" SP		5.00" SP		5.50" SP		6.00" SP		6.50" SP		7.00" SP		7.50" SP		8.00" SP	
CFM	OV	RPM	BHP	RPM	BHP	RPM	BHP	RPM	BHP	RPM	BHP	RPM	BHP	RPM	BHP	RPM	BHP	RPM	BHP
29179	1800	634	23.84	665	27.13	694	30.52	722	33.99	749	37.38	774	40.62	799	43.90	823	47.22	846	50.59
30800	1900	644	25.11	672	28.33	701	31.81	729	35.38	755	39.03	781	42.71	806	46.11	830	49.55	853	53.03
32421	2000	656	26.57	681	29.72	708	33.15	736	36.81	762	40.55	788	44.37	812	48.28	836	51.94	859	55.54
34042	2100	668	28.10	693	31.35	717	34.67	743	38.28	769	42.11	795	46.03	819	50.02	843	54.09	866	58.11
35663	2200	680	29.71	705	33.05	729	36.47	752	39.95	776	43.72	802	47.73	826	51.82	850	55.98	873	60.21
37285	2300	693	31.40	718	34.84	741	38.35	764	41.92	786	45.56	809	49.48	833	53.66	857	57.91	880	62.24
38906	2400	705	33.16	730	36.70	753	40.31	776	43.98	798	47.72	818	51.51	840	55.55	864	59.89	887	64.31
40527	2500	719	34.99	742	38.65	766	42.36	788	46.13	810	49.96	830	53.85	850	57.80	871	61.93	894	66.44
42148	2600	734	36.89	755	40.68	778	44.49	800	48.36	822	52.29	842	56.28	862	60.33	882	64.43	901	68.62
43769	2700	748	38.89	770	42.77	791	46.72	813	50.69	834	54.72	855	58.80	874	62.95	894	67.15	912	71.40
45390	2800	763	40.99	784	44.96	805	49.01	825	53.11	846	57.24	867	61.42	887	65.67	906	69.96	924	74.31
47011	2900	778	43.18	799	47.25	819	51.39	839	55.61	859	59.86	879	64.14	899	68.48	918	72.88	936	77.32
48632	3000	793	45.47	814	49.64	834	53.88	853	58.19	872	62.57	892	66.97	911	71.40	930	75.90	949	80.44
50253	3100	808	47.87	829	52.13	849	56.47	868	60.88	886	65.35	904	69.89	924	74.43	942	79.02	961	83.66
51874	3200	823	50.37	844	54.73	863	59.17	882	63.67	901	68.24	919	72.87	936	77.57	955	82.26	973	87.00
53495	3300	840	53.14	859	57.45	878	61.98	897	66.58	916	71.24	933	75.97	950	80.76	967	85.60	986	90.44
55116	3400	858	56.20	874	60.27	893	64.90	912	69.60	930	74.36	948	79.19	965	84.07	982	89.02	998	94.01
56738	3500	877	59.39	891	63.41	909	67.94	927	72.74	945	77.60	962	82.52	979	87.50	996	92.54	1012	97.64
58359	3600	895	62.74	909	66.84	924	71.11	942	76.00	960	80.96	977	85.98	994	91.06	1010	96.19	1027	101.39
59980	3700	914	66.23	928	70.42	941	74.66	957	79.39	975	84.44	992	89.56	1009	94.74	1025	99.97	1041	105.26

		9.00" SP		10.00" SP		11.00" SP		12.00" SP		13.00" SP		14.00" SP		15.00" SP		16.00" SP		17.00" SP	
CFM	OV	RPM	BHP	RPM	BHP	RPM	BHP	RPM	BHP	RPM	BHP	RPM	BHP	RPM	BHP	RPM	BHP	RPM	BHP
40527	2500	937	75.67	979	85.16	1018	94.91	1056	103.96	1092	113.01	1127	122.18	1161	131.48				
42148	2600	944	78.03	985	87.71	1025	97.64	1062	107.81	1099	117.14	1134	126.55	1168	136.08	1200	145.72		
43769	2700	951	80.45	992	90.32	1032	100.43	1069	110.78	1105	121.35	1140	131.00	1174	140.76	1207	150.64	1239	160.63
45390	2800	960	83.17	1000	92.98	1039	103.28	1076	113.82	1112	124.58	1147	135.53	1181	145.53	1213	155.64	1245	165.87
47011	2900	972	86.37	1007	95.71	1046	106.19	1083	116.91	1119	127.86	1154	139.03	1187	150.39	1220	160.74	1252	171.21
48632	3000	984	89.68	1018	99.12	1053	109.16	1090	120.07	1126	131.20	1161	142.56	1194	154.12	1227	165.89	1258	176.63
50253	3100	996	93.10	1030	102.73	1062	112.55	1097	123.29	1133	134.61	1168	146.15	1201	157.90	1233	169.85	1265	182.01
51874	3200	1008	96.63	1042	106.45	1074	116.46	1105	126.66	1140	138.09	1175	149.81	1208	161.74	1240	173.88	1272	186.22
53495	3300	1021	100.27	1054	110.29	1086	120.49	1117	130.88	1147	141.63	1182	153.54	1215	165.66	1247	177.98	1279	190.50
55116	3400	1033	104.03	1066	114.25	1098	124.65	1129	135.22	1158	145.97	1189	157.33	1222	169.64	1254	182.15	1286	194.85
56738	3500	1045	107.91	1078	118.33	1110	128.92	1141	139.69	1170	150.63	1198	161.74	1229	173.70	1261	186.39	1293	199.28
58359	3600	1058	111.92	1091	122.53	1122	133.32	1153	144.28	1182	155.41	1210	166.71	1238	178.17	1268	190.71	1300	203.79
59980	3700	1072	116.00	1103	126.86	1135	137.85	1165	149.00	1194	160.33	1222	171.82	1250	183.47	1276	195.28	1307	208.36
61601	3800	1086	120.19	1116	131.32	1147	142.51	1177	153.86	1206	165.38	1234	177.06	1262	188.91	1288	200.90	1314	213.05
63222	3900	1101	124.52	1130	135.86	1160	147.30	1190	158.85	1218	170.57	1246	182.44	1274	194.48	1300	206.67	1326	219.01

Performance shown is for installation type B & D - Free or ducted inlet, Ducted outlet. Underlined ratings indicate maximum static efficiency. Power rating (BHP) does not include drive losses. Performance ratings do not include the effects of appurtenances in the airstream.

CLASS 1 | CLASS 2 | CLASS 3

BCS-542 SINGLE WIDTH

CONSTANT SPEED PERFORMANCE CURVES

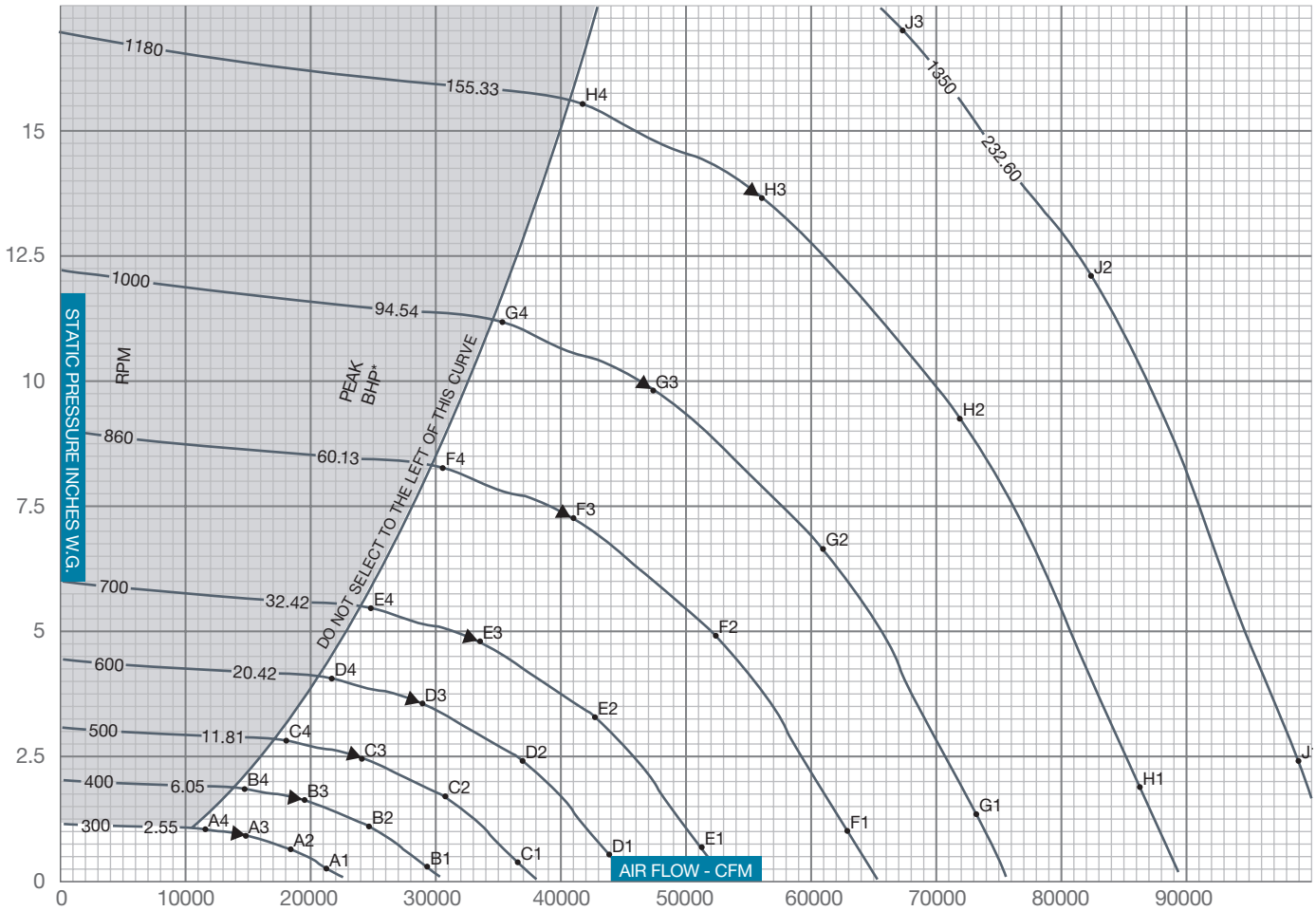

▲ PEAK STATIC EFFICIENCY
* Peak BHP does not include drive losses

$$\% \text{ STATIC EFFICIENCY} = \frac{\text{CFM x SP x .0157}}{\text{BHP}}$$

$$\text{Outlet Velocity (OV) in feet per minute} = \frac{\text{CFM}}{\text{Outlet Area}}$$

SOUND POWER LEVELS x 10^{-12} WATT

The sound power level ratings shown are in decibels, referred to 10^{-12} watts calculated per AMCA Standard 301. Values shown are for inlet L_{wi} sound power levels for installation Type B, free inlet, ducted outlet. Ratings do not include the effects of duct end correction.

FAN RPM	FAN SP	SOUND POINT	BAND / FREQUENCY 1 / 63	2 / 125	3 / 250	4 / 500	5 / 1000	6 / 2000	7 / 4000	8 / 8000
300	0.25	A1	81	77	76	75	69	61	53	46
	0.60	A2	79	74	72	71	65	58	52	46
	0.88	A3	77	72	69	68	63	57	51	45
	1.00	A4	79	75	72	71	65	58	51	45
400	0.25	B1	94	84	85	85	80	71	63	55
	1.06	B2	89	82	79	79	74	67	61	55
	1.57	B3	86	81	75	76	72	66	60	54
	1.78	B4	87	84	77	79	75	67	61	54
500	0.33	C1	98	92	89	90	87	79	71	63
	1.66	C2	94	90	85	84	81	74	68	61
	2.45	C3	92	88	82	81	78	73	67	61
	2.78	C4	95	90	84	84	81	75	68	61
600	0.48	D1	101	100	93	94	92	85	77	69
	2.38	D2	98	96	90	88	86	80	73	67
	3.53	D3	97	94	87	85	83	78	72	66
	4.01	D4	101	96	90	87	86	81	73	66
700	0.65	E1	103	106	97	97	96	91	82	74
	3.25	E2	101	102	94	91	90	85	78	72
	4.80	E3	101	99	92	88	88	83	77	71
	5.45	E4	107	100	95	90	90	86	78	71

FAN RPM	FAN SP	SOUND POINT	BAND / FREQUENCY 1 / 63	2 / 125	3 / 250	4 / 500	5 / 1000	6 / 2000	7 / 4000	8 / 8000
860	0.98	F1	106	113	102	101	101	97	89	81
	4.90	F2	105	108	100	96	95	92	84	78
	7.25	F3	106	105	99	92	93	89	83	77
	8.23	F4	114	106	101	95	96	92	85	78
1000	1.32	G1	109	115	108	105	105	102	94	86
	6.62	G2	107	111	105	100	99	96	89	83
	9.80	G3	109	109	103	97	96	94	88	82
	11.13	G4	116	112	106	99	99	96	90	83
1180	1.84	H1	111	117	114	108	108	106	100	91
	9.22	H2	110	115	111	104	102	100	95	88
	13.65	H3	111	114	109	102	99	98	93	87
	15.50	H4	119	118	111	105	102	101	95	88
1350	2.41	J1	114	119	120	111	111	110	104	96
	12.07	J2	113	117	116	108	105	104	99	92
	17.00	J3	114	117	113	106	102	102	97	91

BCS-600 SINGLE WIDTH

WHEEL DIAMETER: 60.00"
WHEEL CIRCUMFERENCE: 15.71'
OUTLET AREA: 19.91 SQ. FT.
OUTLET SIZE: 47⅝" X 60³⁄₁₆"
INLET DIAMETER: 63¼" O.D.

MAX SPEEDS	CLASS 1	CLASS 2	CLASS 3
Up to 250°F	700	914	1225
251°F to 400°F*	665	868	1164
401°F to 700°F*	574	749	1005
Above 700°F	CONTACT FACTORY		

*Special hi-temp construction required
Tip Speed (fpm) = 15.71 x RPM
Max BHP = 156.448 x (RPM/1000)³

		0.25" SP		0.50" SP		0.75" SP		1.00" SP		1.50" SP		2.00" SP		2.50" SP		3.00" SP		3.50" SP	
CFM	OV	RPM	BHP	RPM	BHP	RPM	BHP	RPM	BHP	RPM	BHP	RPM	BHP	RPM	BHP	RPM	BHP	RPM	BHP
15863	800	186	0.96	220	1.66	250	2.42	280	3.32	333	5.14								
17846	900	202	1.20	232	1.94	261	2.76	287	3.64	338	5.72	383	7.73						
19829	1000	219	1.48	245	2.25	272	3.13	297	4.06	345	6.20	388	8.49						
21812	1100	237	1.82	259	2.60	284	3.55	308	4.54	351	6.68	395	9.21	433	11.69	468	14.18		
23795	1200	254	2.21	274	3.03	297	4.01	319	5.07	361	7.30	401	9.83	439	12.64	474	15.31	507	18.03
25778	1300	272	2.64	291	3.54	311	4.52	332	5.64	371	8.00	407	10.49	446	13.41	480	16.48	513	19.35
27761	1400	290	3.13	308	4.11	324	5.09	345	6.27	383	8.75	418	11.36	452	14.22	487	17.40	518	20.72
29744	1500	308	3.69	325	4.75	341	5.78	358	6.95	394	9.57	429	12.30	460	15.16	493	18.36	525	21.80
31727	1600	326	4.32	342	5.48	357	6.56	372	7.70	407	10.43	440	13.30	471	16.28	499	19.37	531	22.91
33709	1700	345	5.02	360	6.28	374	7.42	388	8.59	421	11.37	451	14.37	482	17.47	510	20.68	537	24.06
35692	1800	363	5.80	378	7.12	392	8.36	405	9.59	434	12.38	464	15.50	493	18.74	521	22.06	547	25.49
37675	1900	382	6.67	396	8.05	409	9.40	422	10.68	448	13.46	477	16.71	504	20.08	532	23.53	558	27.07
39658	2000	400	7.62	414	9.07	426	10.53	439	11.87	462	14.64	491	17.99	517	21.48	543	25.07	569	28.74
41641	2100	419	8.67	432	10.19	444	11.75	456	13.16	478	16.04	504	19.36	530	22.97	555	26.70	580	30.49
43624	2200	438	9.81	450	11.40	462	13.02	473	14.55	495	17.55	518	20.82	544	24.55	568	28.40	591	32.34

		4.00" SP		4.50" SP		5.00" SP		5.50" SP		6.00" SP		6.50" SP		7.00" SP		7.50" SP		8.00" SP	
CFM	OV	RPM	BHP	RPM	BHP	RPM	BHP	RPM	BHP	RPM	BHP	RPM	BHP	RPM	BHP	RPM	BHP	RPM	BHP
35692	1800	573	29.16	601	33.19	628	37.33	653	41.58	677	45.72	700	49.68	723	53.70	744	57.76	765	61.88
37675	1900	582	30.72	608	34.66	634	38.91	659	43.28	683	47.74	706	52.24	728	56.40	750	60.61	771	64.87
39658	2000	593	32.50	616	36.36	640	40.54	665	45.02	689	49.60	712	54.28	735	59.05	756	63.53	777	67.93
41641	2100	604	34.38	627	38.35	648	42.41	672	46.82	696	51.51	719	56.30	741	61.19	762	66.17	783	71.08
43624	2200	615	36.34	638	40.43	659	44.61	680	48.86	702	53.48	725	58.38	747	63.38	768	68.47	789	73.65
45607	2300	626	38.40	649	42.61	670	46.91	691	51.28	710	55.73	731	60.52	753	65.63	775	70.84	795	76.13
47590	2400	638	40.56	660	44.89	681	49.31	702	53.80	721	58.37	740	63.01	760	67.94	781	73.26	802	78.67
49573	2500	650	42.80	671	47.28	692	51.81	713	56.42	732	61.11	751	65.87	769	70.71	787	75.75	808	81.27
51556	2600	663	45.13	683	49.76	704	54.43	724	59.16	743	63.96	762	68.84	780	73.79	797	78.81	814	83.93
53539	2700	677	47.58	696	52.32	715	57.15	735	62.01	754	66.93	773	71.93	791	77.00	808	82.13	825	87.34
55522	2800	690	50.14	709	55.00	728	59.95	746	64.97	765	70.02	784	75.14	802	80.32	819	85.58	836	90.90
57505	2900	703	52.82	722	57.80	741	62.87	758	68.02	777	73.22	795	78.46	813	83.77	830	89.14	847	94.58
59488	3000	717	55.62	736	60.72	754	65.91	772	71.18	788	76.53	806	81.91	824	87.34	841	92.84	858	98.39
61471	3100	731	58.55	749	63.77	767	69.08	785	74.47	801	79.94	818	85.49	835	91.05	852	96.66	869	102.34
63454	3200	744	61.61	763	66.95	781	72.38	798	77.89	815	83.47	831	89.14	846	94.88	863	100.62	880	106.42
65437	3300	760	65.01	777	70.27	794	75.81	811	81.44	828	87.15	844	92.93	859	98.79	875	104.71	891	110.63
67419	3400	776	68.74	790	73.72	808	79.39	825	85.14	841	90.96	857	96.86	872	102.84	887	108.89	903	114.99
69402	3500	793	72.65	806	77.56	822	83.11	838	88.98	854	94.92	870	100.94	886	107.04	901	113.20	915	119.44
71385	3600	810	76.74	822	81.76	835	86.98	852	92.97	868	99.03	884	105.17	899	111.38	914	117.66	928	124.02
73368	3700	826	81.01	839	86.14	851	91.33	866	97.11	882	103.29	897	109.55	912	115.88	927	122.28	941	128.75

		9.00" SP		10.00" SP		11.00" SP		12.00" SP		13.00" SP		14.00" SP		15.00" SP		16.00" SP		17.00" SP	
CFM	OV	RPM	BHP	RPM	BHP	RPM	BHP	RPM	BHP	RPM	BHP	RPM	BHP	RPM	BHP	RPM	BHP	RPM	BHP
49573	2500	847	92.56	885	104.17	920	116.09	955	127.17	987	138.24	1019	149.46	1050	160.83				
51556	2600	854	95.45	891	107.29	927	119.43	961	131.87	993	143.29	1025	154.80	1056	166.45	1085	178.25		
53539	2700	860	98.41	897	110.48	933	122.85	967	135.51	999	148.44	1031	160.24	1062	172.18	1091	184.26	1120	196.48
55522	2800	868	101.73	904	113.74	939	126.34	973	139.22	1006	152.39	1037	165.78	1068	178.02	1097	190.39	1126	202.90
57505	2900	879	105.65	910	117.07	946	129.90	979	143.01	1012	156.40	1043	170.06	1073	183.96	1103	196.62	1132	209.42
59488	3000	890	109.70	920	121.24	952	133.53	986	146.87	1018	160.49	1049	174.38	1080	188.52	1109	202.93	1138	216.06
61471	3100	901	113.88	931	125.66	960	137.67	992	150.81	1025	164.66	1056	178.77	1086	193.14	1115	207.77	1144	222.64
63454	3200	912	118.20	942	130.21	971	142.46	999	154.93	1031	168.91	1062	183.25	1092	197.85	1121	212.69	1150	227.78
65437	3300	923	122.65	953	134.91	982	147.39	1010	160.09	1037	173.24	1068	187.81	1099	202.63	1128	217.71	1156	233.02
67419	3400	934	127.26	964	139.75	993	152.47	1020	165.40	1047	178.55	1075	192.45	1105	207.51	1134	222.81	1162	238.35
69402	3500	945	132.00	975	144.74	1004	157.70	1031	170.87	1058	184.25	1084	197.84	1111	212.47	1140	228.00	1169	243.77
71385	3600	957	136.90	986	149.88	1015	163.08	1042	176.49	1069	190.10	1094	203.93	1119	217.95	1147	233.28	1175	249.27
73368	3700	969	141.89	998	155.18	1026	168.62	1053	182.26	1080	196.12	1105	210.17	1130	224.43	1154	238.87	1181	254.87
75351	3800	982	147.02	1009	160.63	1037	174.31	1064	188.20	1091	202.30	1116	216.59	1141	231.07	1165	245.75	1188	260.61
77334	3900	995	152.31	1021	166.18	1048	180.18	1076	194.31	1102	208.64	1127	223.17	1152	237.89	1175	252.80	1199	267.89

Performance shown is for installation type B & D - Free or ducted inlet, Ducted outlet. Underlined ratings indicate maximum static efficiency. Power rating (BHP) does not include drive losses. Performance ratings do not include the effects of appurtenances in the airstream.

CLASS 1 | CLASS 2 | CLASS 3

BCS-600 SINGLE WIDTH

CONSTANT SPEED PERFORMANCE CURVES

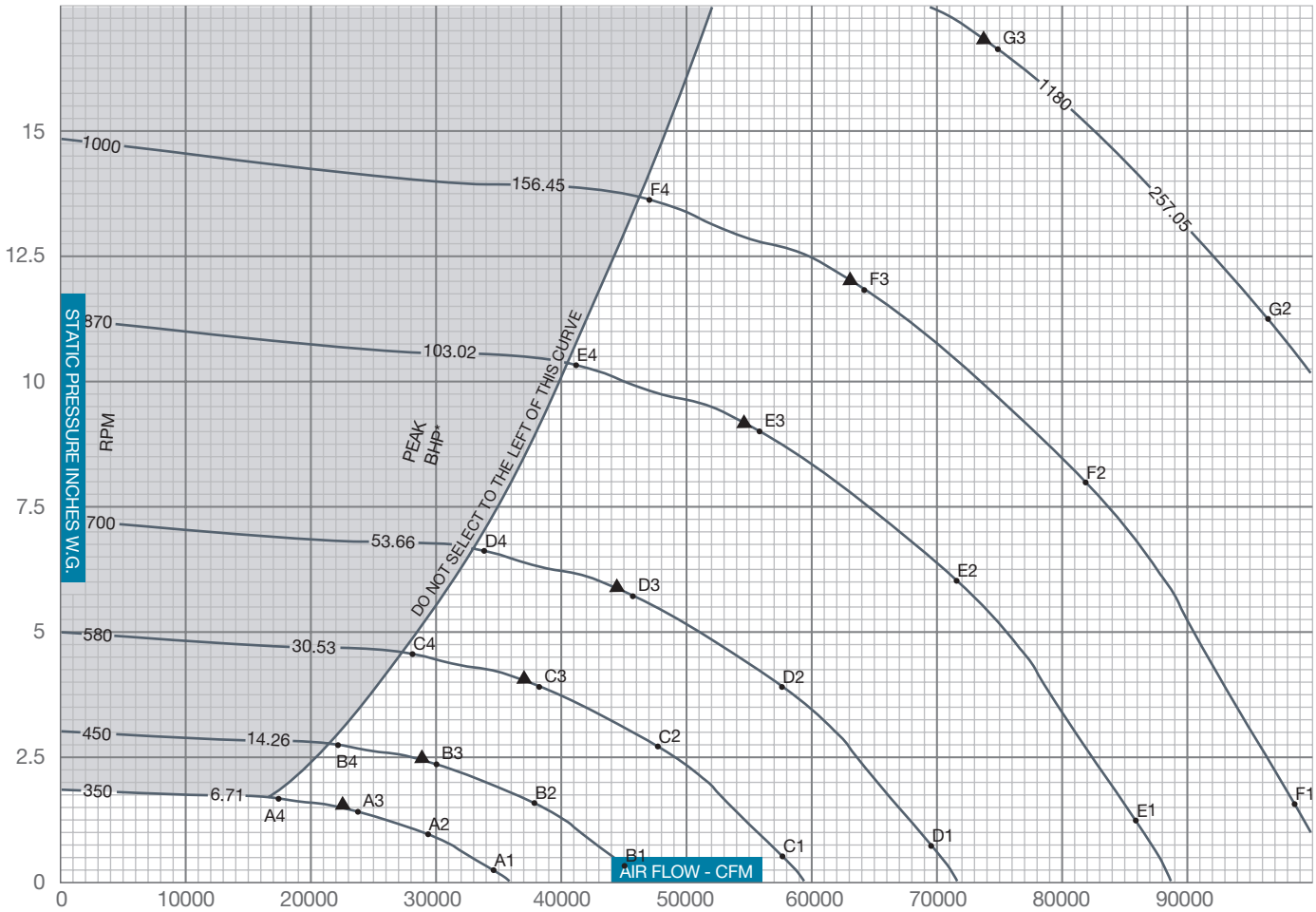

▲ PEAK STATIC EFFICIENCY
* Peak BHP does not include drive losses

$$\% \text{ STATIC EFFICIENCY} = \frac{\text{CFM x SP x .0157}}{\text{BHP}}$$

$$\text{Outlet Velocity (OV) in feet per minute} = \frac{\text{CFM}}{\text{Outlet Area}}$$

SOUND POWER LEVELS x 10^{-12} WATT

The sound power level ratings shown are in decibels, referred to 10^{-12} watts calculated per AMCA Standard 301. Values shown are for inlet L_{wi} sound power levels for installation Type B, free inlet, ducted outlet. Ratings do not include the effects of duct end correction.

FAN RPM	FAN SP	SOUND POINT	*BAND* / FREQUENCY 1 / 63	2 / 125	3 / 250	4 / 500	5 / 1000	6 / 2000	7 / 4000	8 / 8000
350	0.20	A1	92	85	85	84	79	70	65	68
	1.00	A2	88	82	79	78	73	66	62	65
	1.47	A3	85	80	76	76	71	65	61	64
	1.67	A4	87	83	78	78	73	66	62	65
450	0.33	B1	100	92	90	91	87	78	70	72
	1.64	B2	95	89	85	84	81	74	67	69
	2.43	B3	93	88	82	82	79	72	67	68
	2.76	B4	94	91	84	85	81	74	67	69
580	0.55	C1	104	101	96	96	94	87	79	76
	2.73	C2	101	98	92	90	88	82	75	74
	4.03	C3	100	96	89	87	86	80	74	73
	4.58	C4	104	98	92	90	88	83	75	74
700	0.79	D1	106	109	100	100	99	94	85	80
	3.97	D2	104	105	97	94	93	88	81	77
	5.88	D3	104	102	95	91	91	86	80	76
	6.67	D4	110	103	98	93	93	89	81	77

FAN RPM	FAN SP	SOUND POINT	*BAND* / FREQUENCY 1 / 63	2 / 125	3 / 250	4 / 500	5 / 1000	6 / 2000	7 / 4000	8 / 8000
870	1.23	E1	110	116	106	105	105	101	92	84
	6.13	E2	109	112	103	99	99	95	88	81
	9.08	E3	110	109	102	96	96	93	86	81
	10.30	E4	117	110	105	98	99	95	88	81
1000	1.62	F1	112	118	111	108	108	105	97	89
	8.10	F2	111	114	108	103	102	99	92	86
	12.00	F3	112	113	107	100	99	97	91	85
	13.61	F4	120	115	109	102	102	99	93	86
1180	2.26	G1	115	121	117	111	111	109	103	94
	11.28	G2	114	118	114	107	105	103	98	91
	16.70	G3	115	117	112	105	102	101	96	90

BCS-660 SINGLE WIDTH

WHEEL DIAMETER: 66.00"
WHEEL CIRCUMFERENCE: 17.28'
OUTLET AREA: 21.10 SQ. FT.
OUTLET SIZE: 52⅜" X 66¼"
INLET DIAMETER: 69¼" O.D.

MAX SPEEDS	CLASS 1	CLASS 2	CLASS 3
Up to 250°F	637	831	1114
251°F to 400°F*	605	789	1058
401°F to 700°F*	522	681	913
Above 700°F	CONTACT FACTORY		

*Special hi-temp construction required
Tip Speed (fpm) = 17.28 x RPM
Max BHP = 251.961 x $(RPM/1000)^3$

		0.25" SP		0.50" SP		0.75" SP		1.00" SP		1.50" SP		2.00" SP		2.50" SP		3.00" SP		3.50" SP	
CFM	OV	RPM	BHP	RPM	BHP	RPM	BHP	RPM	BHP	RPM	BHP	RPM	BHP	RPM	BHP	RPM	BHP	RPM	BHP
19194	800	169	1.16	200	2.01	227	2.93	255	4.02	302	6.22								
21594	900	184	1.45	211	2.34	237	3.34	261	4.41	308	6.92	348	9.36						
23993	1000	199	1.80	223	2.72	247	3.79	270	4.92	313	7.50	353	10.28						
26392	1100	215	2.20	235	3.15	258	4.30	280	5.50	319	8.09	359	11.14	394	14.15	426	17.16		
28792	1200	231	2.67	249	3.66	270	4.85	290	6.14	328	8.83	364	11.90	399	15.29	431	18.53	461	21.81
31191	1300	247	3.20	264	4.28	282	5.47	302	6.83	338	9.67	370	12.70	405	16.23	437	19.95	466	23.41
33591	1400	264	3.79	280	4.97	295	6.16	314	7.58	348	10.59	380	13.75	411	17.20	442	21.06	471	25.07
35990	1500	280	4.46	295	5.75	310	7.00	326	8.41	358	11.58	390	14.88	418	18.34	448	22.21	477	26.37
38389	1600	297	5.22	311	6.62	325	7.94	338	9.32	370	12.63	400	16.10	428	19.69	454	23.43	483	27.72
40789	1700	313	6.07	327	7.59	340	8.98	353	10.40	382	13.76	410	17.39	438	21.14	464	25.02	489	29.11
43188	1800	330	7.02	343	8.62	356	10.12	368	11.61	395	14.98	422	18.76	448	22.67	474	26.69	497	30.84
45587	1900	347	8.07	360	9.74	372	11.37	383	12.93	407	16.29	434	20.21	459	24.30	484	28.47	507	32.76
47987	2000	364	9.22	376	10.98	388	12.74	399	14.36	420	17.72	446	21.77	470	26.00	494	30.34	517	34.78
50386	2100	381	10.49	393	12.33	404	14.21	414	15.92	435	19.41	458	23.43	482	27.80	504	32.31	527	36.90
52785	2200	398	11.88	409	13.79	420	15.76	430	17.61	450	21.24	471	25.19	494	29.71	516	34.36	538	39.13

		4.00" SP		4.50" SP		5.00" SP		5.50" SP		6.00" SP		6.50" SP		7.00" SP		7.50" SP		8.00" SP	
CFM	OV	RPM	BHP	RPM	BHP	RPM	BHP	RPM	BHP	RPM	BHP	RPM	BHP	RPM	BHP	RPM	BHP	RPM	BHP
43188	1800	521	35.28	547	40.16	571	45.17	593	50.31	615	55.33	637	60.12	657	64.97	677	69.89	696	74.87
45587	1900	529	37.17	552	41.94	576	47.08	599	52.36	621	57.77	642	63.21	662	68.24	682	73.34	701	78.49
47987	2000	539	39.33	560	43.99	582	49.06	605	54.48	627	60.02	648	65.68	668	71.45	687	76.87	706	82.20
50386	2100	549	41.60	570	46.40	590	51.31	611	56.65	632	62.33	653	68.13	673	74.04	693	80.06	712	86.01
52785	2200	559	43.97	580	48.92	599	53.97	618	59.12	638	64.71	659	70.64	679	76.69	699	82.85	717	89.12
55185	2300	569	46.47	590	51.56	609	56.76	628	62.05	646	67.44	665	73.23	685	79.42	704	85.71	723	92.12
57584	2400	580	49.08	600	54.32	619	59.66	638	65.10	656	70.62	673	76.24	691	82.21	710	88.65	729	95.19
59983	2500	591	51.78	610	57.21	629	62.69	648	68.27	665	73.94	683	79.70	699	85.55	716	91.66	735	98.34
62383	2600	603	54.61	621	60.21	640	65.86	658	71.58	675	77.40	692	83.30	709	89.29	725	95.36	740	101.56
64782	2700	615	57.57	633	63.31	650	69.15	668	75.03	686	80.99	702	87.04	719	93.17	735	99.38	750	105.68
67182	2800	627	60.67	645	66.55	662	72.54	678	78.61	696	84.72	712	90.91	729	97.19	744	103.55	760	109.99
69581	2900	639	63.91	657	69.93	673	76.07	690	82.31	706	88.60	723	94.94	739	101.36	754	107.86	770	114.44
71980	3000	652	67.30	669	73.47	685	79.75	701	86.13	717	92.60	733	99.12	749	105.68	765	112.33	780	119.06
74380	3100	664	70.85	681	77.16	698	83.58	713	90.10	729	96.72	743	103.44	759	110.16	775	116.96	790	123.83
76779	3200	677	74.55	694	81.01	710	87.58	725	94.24	741	101.00	755	107.86	770	114.80	785	121.75	800	128.76
79178	3300	691	78.66	706	85.02	722	91.74	738	98.54	753	105.45	767	112.45	781	119.53	795	126.70	810	133.87
81578	3400	706	83.18	719	89.20	734	96.06	750	103.02	765	110.07	779	117.21	793	124.44	807	131.75	820	139.14
83977	3500	721	87.91	732	93.85	747	100.56	762	107.66	777	114.86	791	122.14	805	129.51	819	136.97	832	144.52
86376	3600	736	92.85	747	98.93	759	105.24	774	112.49	789	119.83	803	127.26	817	134.77	831	142.37	844	150.06
88776	3700	751	98.02	763	104.23	774	110.51	787	117.50	801	124.99	816	132.56	829	140.22	843	147.96	856	155.79

		9.00" SP		10.00" SP		11.00" SP		12.00" SP		13.00" SP		14.00" SP		15.00" SP		16.00" SP		17.00" SP	
CFM	OV	RPM	BHP	RPM	BHP	RPM	BHP	RPM	BHP	RPM	BHP	RPM	BHP	RPM	BHP	RPM	BHP	RPM	BHP
59983	2500	770	112.00	804	126.05	837	140.47	868	153.88	898	167.27	927	180.84	954	194.60				
62383	2600	776	115.50	810	129.82	842	144.52	873	159.57	903	173.38	932	187.30	960	201.40	987	215.68		
64782	2700	782	119.08	816	133.68	848	148.65	879	163.97	909	179.61	937	193.89	965	208.34	992	222.96	1018	237.74
67182	2800	789	123.10	822	137.62	854	152.87	885	168.46	914	184.39	943	200.60	970	215.40	997	230.37	1023	245.50
69581	2900	799	127.84	827	141.65	860	157.17	890	173.04	920	189.25	948	205.78	976	222.59	1003	237.92	1029	253.40
71980	3000	809	132.73	837	146.71	865	161.57	896	177.71	926	194.19	954	211.00	982	228.12	1008	245.54	1034	261.44
74380	3100	819	137.79	846	152.05	873	166.59	902	182.48	931	199.24	960	216.31	987	233.70	1014	251.40	1040	269.39
76779	3200	829	143.02	856	157.56	883	172.38	908	187.47	937	204.38	966	221.73	993	239.39	1020	257.36	1045	275.62
79178	3300	839	148.41	866	163.24	893	178.34	918	193.71	943	209.62	971	227.25	999	245.19	1025	263.43	1051	281.96
81578	3400	849	153.98	876	169.10	903	184.49	928	200.14	952	216.05	977	232.87	1005	251.08	1031	269.60	1057	288.40
83977	3500	859	159.72	886	175.13	912	190.81	938	206.75	962	222.94	985	239.39	1010	257.09	1037	275.88	1062	294.96
86376	3600	870	165.65	897	181.36	923	197.32	948	213.55	972	230.03	995	246.75	1017	263.71	1043	282.26	1068	301.62
88776	3700	881	171.69	907	187.76	933	204.03	958	220.54	982	237.30	1005	254.31	1027	271.55	1049	289.03	1074	308.40
91175	3800	893	177.90	917	194.36	943	210.92	968	227.73	991	244.78	1015	262.07	1037	279.60	1059	297.35	1080	315.34
93574	3900	905	184.30	929	201.08	953	218.01	978	235.11	1002	252.46	1025	270.03	1047	287.85	1069	305.88	1090	324.15

Performance shown is for installation type B & D - Free or ducted inlet, Ducted outlet. Underlined ratings indicate maximum static efficiency. Power rating (BHP) does not include drive losses. Performance ratings do not include the effects of appurtenances in the airstream.

CLASS 1 | CLASS 2 | CLASS 3

BCS-660 SINGLE WIDTH

CONSTANT SPEED PERFORMANCE CURVES

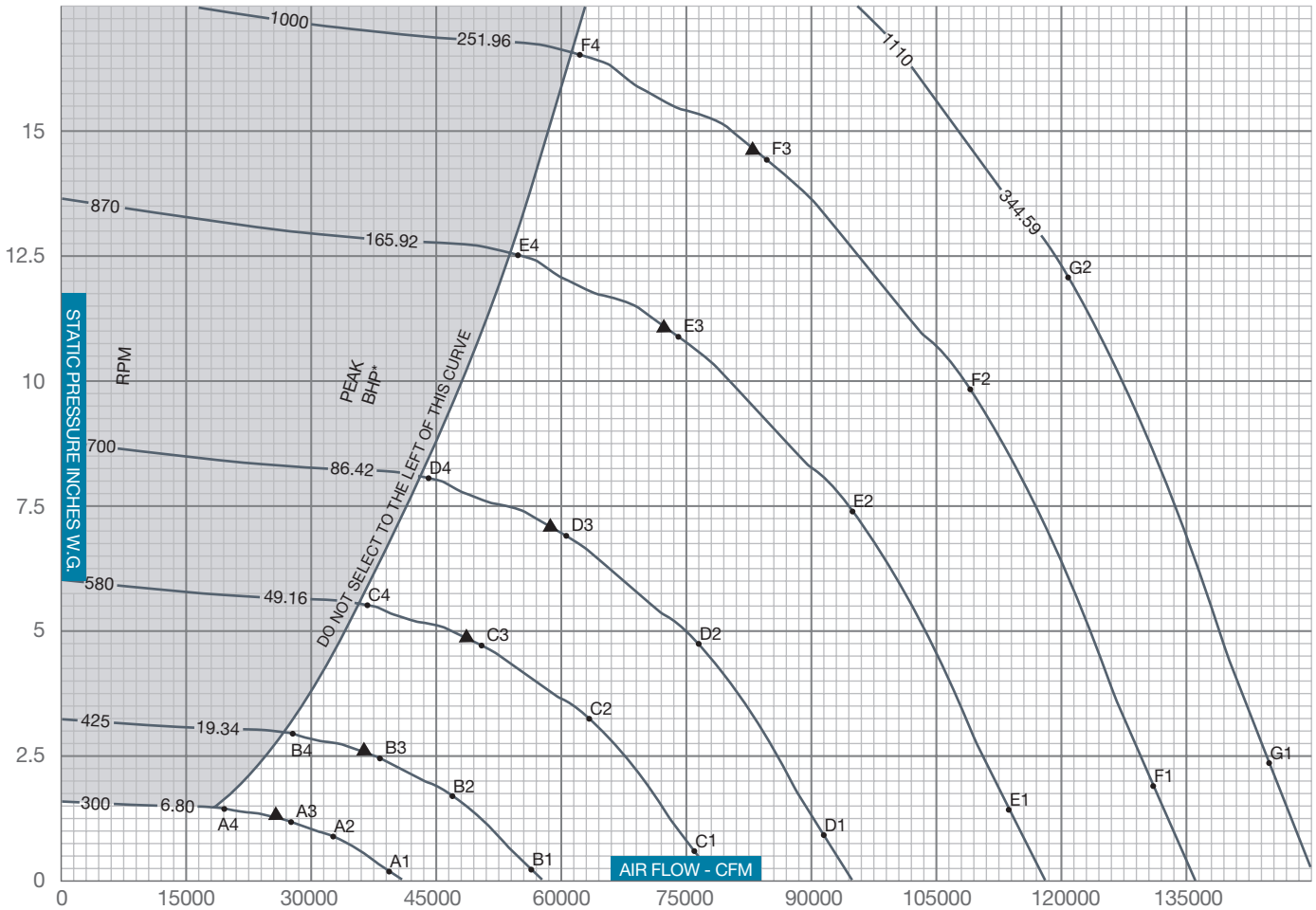

▲ PEAK STATIC EFFICIENCY
* Peak BHP does not include drive losses

$$\%\text{STATIC EFFICIENCY} = \frac{\text{CFM x SP x .0157}}{\text{BHP}}$$

$$\text{Outlet Velocity (OV) in feet per minute} = \frac{\text{CFM}}{\text{Outlet Area}}$$

SOUND POWER LEVELS x 10^{-12} WATT

The sound power level ratings shown are in decibels, referred to 10^{-12} watts calculated per AMCA Standard 301. Values shown are for inlet L_{wi} sound power levels for installation Type B, free inlet, ducted outlet. Ratings do not include the effects of duct end correction.

FAN RPM	FAN SP	SOUND POINT	BAND / FREQUENCY 1 / 63	2 / 125	3 / 250	4 / 500	5 / 1000	6 / 2000	7 / 4000	8 / 8000
300	0.18	A1	89	84	84	83	76	68	65	68
	0.88	A2	86	80	78	77	71	64	62	65
	1.31	A3	83	78	75	74	69	63	61	64
	1.48	A4	85	81	78	77	71	64	62	65
425	0.35	B1	102	92	92	92	88	79	71	74
	1.77	B2	98	90	86	86	82	75	69	71
	2.62	B3	95	89	83	84	80	74	68	70
	2.98	B4	96	92	85	86	83	75	68	71
580	0.66	C1	107	104	99	99	97	90	82	79
	3.30	C2	104	101	95	93	91	85	78	77
	4.88	C3	103	99	92	90	88	83	77	76
	5.54	C4	107	101	95	92	91	85	78	76
700	0.96	D1	110	112	103	103	102	97	88	83
	4.80	D2	108	108	100	97	96	91	84	80
	7.11	D3	108	105	98	94	93	89	83	79
	8.07	D4	114	106	101	96	96	91	84	80

FAN RPM	FAN SP	SOUND POINT	BAND / FREQUENCY 1 / 63	2 / 125	3 / 250	4 / 500	5 / 1000	6 / 2000	7 / 4000	8 / 8000
870	1.48	E1	113	119	108	108	108	104	95	87
	7.42	E2	112	115	106	102	101	98	91	84
	10.98	E3	113	112	105	99	99	96	89	83
	12.47	E4	120	113	108	101	102	98	91	84
1000	1.96	F1	115	121	114	111	111	108	100	92
	9.81	F2	114	117	111	106	104	102	95	89
	14.51	F3	115	116	109	103	102	100	94	88
	16.47	F4	123	118	112	105	104	102	96	89
1110	2.42	G1	117	123	118	113	113	111	104	95
	12.08	G2	116	120	115	109	107	105	99	92

BCA-182 SINGLE WIDTH

WHEEL DIAMETER: 18.25"
WHEEL CIRCUMFERENCE: 4.78'
OUTLET AREA: 1,829 SQ. FT.
OUTLET SIZE: 14½" X 18³⁄₁₆"
INLET DIAMETER: 19½" O.D.

MAX SPEEDS	CLASS 1	CLASS 2	CLASS 3
Up to 250°F	2346	3061	3825
251°F to 400°F*	2229	2908	3634
401°F to 700°F*	1924	2510	3137
Above 700°F	CONTACT FACTORY		

*Special hi-temp construction required
Tip Speed (fpm) = 4.78 x RPM
Max BHP = 0.404 x $(RPM/1000)^3$

		0.25" SP		0.50" SP		0.75" SP		1.00" SP		1.50" SP		2.00" SP		2.50" SP		3.00" SP		3.50" SP	
CFM	OV	RPM	BHP	RPM	BHP	RPM	BHP	RPM	BHP	RPM	BHP	RPM	BHP	RPM	BHP	RPM	BHP	RPM	BHP
1280	700	572	0.07	680	0.13	783	0.19												
1463	800	624	0.09	721	0.15	811	0.21	903	0.29										
1646	900	678	0.11	766	0.18	850	0.25	928	0.32	1099	0.49								
1829	1000	735	0.14	815	0.21	892	0.28	965	0.36	1110	0.54								
2012	1100	793	0.17	866	0.25	937	0.33	1006	0.41	1135	0.59	1274	0.79						
2195	1200	852	0.21	918	0.29	985	0.37	1049	0.46	1173	0.65	1293	0.86	1422	1.08				
2377	1300	912	0.25	974	0.34	1036	0.43	1096	0.52	1213	0.71	1322	0.93	1435	1.16	1557	1.41		
2560	1400	972	0.30	1031	0.39	1088	0.49	1145	0.59	1255	0.79	1360	1.01	1460	1.25	1567	1.50	1681	1.77
2743	1500	1033	0.35	1089	0.45	1141	0.55	1196	0.66	1299	0.87	1400	1.10	1496	1.34	1591	1.61	1689	1.88
2926	1600	1093	0.41	1148	0.52	1198	0.63	1247	0.74	1345	0.97	1442	1.20	1534	1.44	1622	1.72	1713	2.00
3109	1700	1155	0.48	1207	0.59	1255	0.71	1300	0.82	1395	1.06	1485	1.31	1575	1.56	1660	1.83	1742	2.13
3292	1800	1216	0.55	1267	0.68	1313	0.80	1356	0.92	1446	1.17	1532	1.43	1617	1.69	1699	1.96	1779	2.26
3475	1900	1278	0.64	1327	0.77	1371	0.89	1413	1.02	1497	1.28	1579	1.55	1660	1.83	1741	2.11	1818	2.40
3658	2000	1340	0.73	1387	0.86	1430	1.00	1470	1.13	1549	1.41	1629	1.69	1706	1.98	1784	2.27	1859	2.57
3841	2100	1403	0.83	1447	0.97	1489	1.11	1528	1.25	1602	1.54	1680	1.83	1753	2.13	1827	2.44	1900	2.75

		4.00" SP		4.50" SP		5.00" SP		5.50" SP		6.00" SP		6.50" SP		7.00" SP		7.50" SP		8.00" SP	
CFM	OV	RPM	BHP	RPM	BHP	RPM	BHP	RPM	BHP	RPM	BHP	RPM	BHP	RPM	BHP	RPM	BHP	RPM	BHP
3109	1700	1829	2.43	1915	2.74	2011	3.06	2103	3.39										
3292	1800	1855	2.58	1939	2.90	2021	3.22	2111	3.56	2199	3.91								
3475	1900	1893	2.73	1964	3.06	2045	3.40	2122	3.74	2206	4.10	2290	4.46	2371	4.83				
3658	2000	1931	2.88	2002	3.23	2070	3.58	2146	3.94	2220	4.29	2298	4.67	2379	5.05	2457	5.43		
3841	2100	1971	3.06	2040	3.40	2107	3.76	2172	4.14	2245	4.51	2315	4.88	2387	5.27	2465	5.67	2540	6.07
4024	2200	2012	3.26	2080	3.60	2145	3.96	2209	4.34	2271	4.73	2340	5.12	2408	5.51	2474	5.91	2548	6.32
4207	2300	2055	3.47	2121	3.82	2184	4.17	2247	4.55	2308	4.95	2367	5.35	2432	5.76	2498	6.17	2562	6.59
4390	2400	2099	3.70	2163	4.05	2225	4.41	2286	4.78	2346	5.18	2405	5.59	2461	6.02	2522	6.44	2586	6.87
4572	2500	2145	3.93	2206	4.30	2267	4.66	2327	5.04	2385	5.42	2443	5.84	2499	6.28	2554	6.72	2610	7.16
4755	2600	2191	4.17	2251	4.55	2310	4.93	2368	5.32	2426	5.71	2481	6.11	2537	6.54	2591	6.99	2644	7.45
4938	2700	2240	4.43	2297	4.82	2354	5.21	2411	5.61	2467	6.01	2522	6.42	2576	6.83	2629	7.28	2682	7.75
5121	2800	2290	4.69	2344	5.10	2400	5.51	2455	5.92	2510	6.33	2564	6.74	2617	7.17	2668	7.60	2720	8.06
5304	2900	2341	4.97	2394	5.39	2447	5.81	2500	6.23	2553	6.66	2606	7.08	2658	7.52	2709	7.96	2759	8.40
5487	3000	2392	5.27	2444	5.70	2495	6.13	2547	6.56	2598	7.00	2650	7.44	2701	7.88	2750	8.33	2800	8.78
5670	3100	2443	5.58	2495	6.01	2545	6.46	2593	6.91	2644	7.35	2694	7.81	2744	8.26	2793	8.72	2841	9.18
5853	3200	2495	5.90	2546	6.35	2595	6.80	2643	7.26	2691	7.73	2740	8.19	2788	8.66	2836	9.13	2884	9.60
6036	3300	2547	6.24	2597	6.70	2646	7.16	2694	7.63	2740	8.11	2787	8.59	2834	9.07	2880	9.55	2927	10.03
6219	3400	2600	6.59	2649	7.06	2697	7.54	2744	8.02	2790	8.51	2834	9.00	2880	9.49	2926	9.98	2971	10.48
6402	3500	2655	6.96	2701	7.44	2749	7.93	2795	8.42	2840	8.92	2884	9.42	2927	9.93	2972	10.43	3017	10.94
6585	3600	2712	7.34	2754	7.84	2801	8.34	2847	8.84	2891	9.35	2935	9.86	2977	10.38	3019	10.90	3063	11.42

		9.00" SP		10.00" SP		11.00" SP		12.00" SP		13.00" SP		14.00" SP		15.00" SP		16.00" SP		17.00" SP	
CFM	OV	RPM	BHP	RPM	BHP	RPM	BHP	RPM	BHP	RPM	BHP	RPM	BHP	RPM	BHP	RPM	BHP	RPM	BHP
4572	2500	2732	8.05	2852	8.96	2982	9.91	3106	10.88										
4755	2600	2756	8.37	2871	9.30	2989	10.26	3113	11.25	3233	12.26								
4938	2700	2783	8.70	2895	9.66	3005	10.63	3121	11.64	3240	12.67	3355	13.71						
5121	2800	2821	9.03	2920	10.02	3029	11.02	3133	12.03	3248	13.08	3362	14.15	3473	15.23				
5304	2900	2858	9.37	2954	10.39	3053	11.42	3157	12.45	3258	13.50	3370	14.59	3480	15.70	3587	16.81		
5487	3000	2896	9.72	2991	10.76	3082	11.82	3182	12.88	3282	13.95	3378	15.04	3488	16.17	3595	17.32	3699	18.47
5670	3100	2936	10.13	3029	11.14	3120	12.22	3207	13.32	3306	14.42	3403	15.53	3496	16.65	3602	17.82	3706	19.01
5853	3200	2977	10.56	3068	11.54	3158	12.64	3244	13.76	3331	14.89	3427	16.03	3520	17.17	3610	18.34	3714	19.55
6036	3300	3019	11.01	3108	12.01	3196	13.07	3282	14.21	3365	15.37	3451	16.54	3544	17.71	3634	18.89	3721	20.09
6219	3400	3062	11.48	3149	12.50	3235	13.54	3320	14.67	3403	15.85	3483	17.05	3568	18.25	3658	19.46	3746	20.68
6402	3500	3105	11.97	3191	13.01	3276	14.07	3358	15.14	3441	16.34	3521	17.56	3598	18.80	3683	20.04	3770	21.28
6585	3600	3148	12.48	3234	13.53	3317	14.61	3399	15.71	3479	16.85	3559	18.09	3636	19.35	3711	20.63	3794	21.90
6768	3700	3194	12.99	3277	14.08	3359	15.17	3440	16.29	3519	17.42	3597	18.64	3673	19.91	3748	21.21	3821	22.52
6950	3800	3240	13.53	3321	14.64	3402	15.76	3481	16.89	3559	18.04	3635	19.21	3711	20.49	3786	21.81		
7133	3900	3287	14.08	3367	15.22	3446	16.36	3524	17.51	3601	18.68	3676	19.87	3750	21.08	3824	22.42		

Performance shown is for installation type B & D - Free or ducted inlet, Ducted outlet. Underlined ratings indicate maximum static efficiency. Power rating (BHP) does not include drive losses. Performance ratings do not include the effects of appurtenances in the airstream. NOTE: Ratings shown apply also to model QBCA.

CLASS 1 | CLASS 2 | CLASS 3

BCA-182 SINGLE WIDTH

CONSTANT SPEED PERFORMANCE CURVES

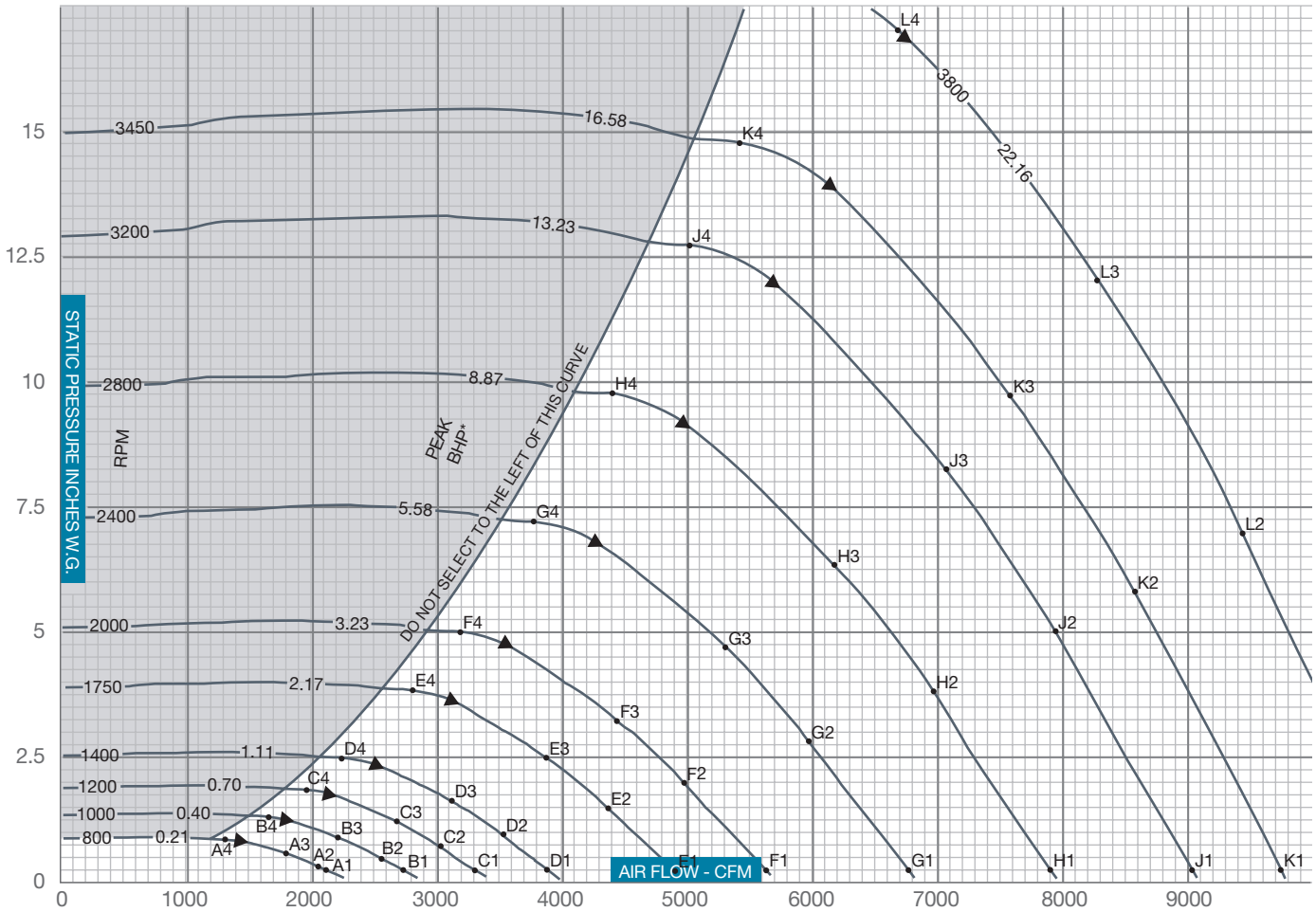

▲ PEAK STATIC EFFICIENCY
* Peak BHP does not include drive losses

$$\% \text{ STATIC EFFICIENCY} = \frac{\text{CFM x SP x .0157}}{\text{BHP}}$$

$$\text{Outlet Velocity (OV) in feet per minute} = \frac{\text{CFM}}{\text{Outlet Area}}$$

SOUND POWER LEVELS x 10^{-12} WATT

The sound power level ratings shown are in decibels, referred to 10^{-12} watts calculated per AMCA Standard 301. Values shown are for inlet L_{wi} sound power levels for installation Type B, free inlet, ducted outlet. Ratings do not include the effects of duct end correction.

FAN RPM	FAN SP	SOUND POINT	BAND / FREQUENCY 1 / 63	2 / 125	3 / 250	4 / 500	5 / 1000	6 / 2000	7 / 4000	8 / 8000
800	0.25	A1	67	74	70	67	66	62	58	54
	0.31	A2	67	74	70	67	65	62	58	54
	0.52	A3	67	74	71	67	66	62	58	54
	0.79	A4	66	73	70	67	65	62	58	53
1000	0.25	B1	73	79	77	73	71	68	64	60
	0.49	B2	73	79	77	73	71	68	64	60
	0.82	B3	73	78	78	73	71	68	64	60
	1.24	B4	73	78	77	73	71	68	64	60
1200	0.25	C1	80	82	83	79	75	73	69	65
	0.71	C2	80	82	83	78	75	73	69	65
	1.18	C3	80	81	83	79	75	73	69	65
	1.79	C4	80	81	82	78	75	73	69	65
1400	0.25	D1	85	84	88	83	79	77	74	69
	0.96	D2	85	84	88	83	79	77	74	69
	1.60	D3	86	84	88	83	79	77	74	69
	2.43	D4	86	84	87	83	79	77	73	69
1750	0.25	E1	93	88	94	90	84	83	80	76
	1.50	E2	93	88	94	90	84	83	80	76
	2.50	E3	94	88	94	90	84	83	80	76
	3.80	E4	94	87	94	89	84	83	80	75
2000	0.25	F1	95	93	96	94	88	86	84	79
	1.96	F2	96	93	97	94	88	86	83	79
	3.27	F3	97	93	96	94	88	86	83	79
	4.96	F4	97	93	96	93	88	86	83	79

FAN RPM	FAN SP	SOUND POINT	BAND / FREQUENCY 1 / 63	2 / 125	3 / 250	4 / 500	5 / 1000	6 / 2000	7 / 4000	8 / 8000
2400	0.25	G1	98	99	100	99	94	91	88	85
	2.82	G2	99	99	100	100	93	90	88	84
	4.70	G3	100	100	99	99	94	91	88	84
	7.15	G4	100	100	99	99	93	90	88	84
2800	0.25	H1	101	104	102	104	98	94	92	89
	3.84	H2	101	105	102	104	98	94	92	89
	6.40	H3	102	106	102	104	98	94	92	89
	9.73	H4	103	105	102	104	98	94	92	88
3200	0.25	J1	103	109	105	108	102	97	96	93
	5.02	J2	104	110	104	109	102	97	96	92
	8.36	J3	105	111	104	108	102	97	96	92
	12.71	J4	105	111	104	108	102	97	95	92
3450	0.25	K1	104	112	106	110	104	99	98	95
	5.83	K2	105	112	106	111	104	99	98	94
	9.72	K3	106	113	106	110	105	99	98	94
	14.77	K4	106	113	105	110	104	99	97	94
3800	0.25	L1	106	113	109	112	107	102	100	97
	7.07	L2	107	114	109	112	107	102	100	97
	11.79	L3	108	115	109	112	108	102	100	97
	17.00	L4	108	115	109	111	107	101	100	97

BCA-200 SINGLE WIDTH

WHEEL DIAMETER: 20.00"
WHEEL CIRCUMFERENCE: 5.24'
OUTLET AREA: 2.196 SQ. FT.
OUTLET SIZE: 15⅞" X 19¹⁵⁄₁₆"
INLET DIAMETER: 21½" O.D.

MAX SPEEDS	CLASS 1	CLASS 2	CLASS 3
Up to 250°F	2141	2793	3490
251°F to 400°F*	2034	2653	3316
401°F to 700°F*	1756	2290	2862
Above 700°F	CONTACT FACTORY		

*Special hi-temp construction required
Tip Speed (fpm) = 5.24 x RPM
Max BHP = 0.639 x $(RPM/1000)^3$

		0.25" SP		0.50" SP		0.75" SP		1.00" SP		1.50" SP		2.00" SP		2.50" SP		3.00" SP		3.50" SP	
CFM	OV	RPM	BHP	RPM	BHP	RPM	BHP	RPM	BHP	RPM	BHP	RPM	BHP	RPM	BHP	RPM	BHP	RPM	BHP
1537	700	522	0.09	620	0.15	715	0.23												
1757	800	569	0.11	658	0.18	740	0.26	824	0.34										
1977	900	619	0.14	699	0.21	775	0.29	847	0.39	1003	0.59								
2196	1000	671	0.17	743	0.25	814	0.34	881	0.43	1013	0.64								
2416	1100	724	0.21	790	0.30	855	0.39	918	0.49	1036	0.71	1162	0.95						
2636	1200	778	0.25	838	0.35	899	0.45	958	0.55	1070	0.78	1180	1.03	1298	1.30				
2855	1300	832	0.30	889	0.41	945	0.51	1000	0.63	1107	0.86	1206	1.12	1310	1.40	1420	1.69		
3075	1400	887	0.36	941	0.47	993	0.59	1045	0.70	1145	0.95	1241	1.21	1332	1.50	1430	1.81	1534	2.12
3295	1500	942	0.42	994	0.54	1041	0.67	1091	0.79	1185	1.05	1278	1.32	1365	1.62	1452	1.93	1541	2.26
3514	1600	998	0.50	1048	0.62	1093	0.75	1138	0.89	1228	1.16	1316	1.44	1400	1.73	1480	2.07	1563	2.41
3734	1700	1054	0.58	1102	0.71	1145	0.85	1186	0.99	1273	1.28	1355	1.57	1437	1.88	1515	2.20	1589	2.56
3954	1800	1110	0.67	1156	0.81	1198	0.96	1237	1.10	1319	1.40	1397	1.71	1476	2.03	1551	2.36	1624	2.72
4173	1900	1166	0.77	1210	0.92	1251	1.07	1289	1.23	1366	1.54	1441	1.87	1515	2.20	1588	2.54	1659	2.88
4393	2000	1223	0.88	1265	1.04	1305	1.20	1342	1.36	1413	1.69	1487	2.03	1557	2.37	1627	2.73	1696	3.09
4613	2100	1280	1.00	1321	1.17	1359	1.34	1395	1.50	1462	1.85	1533	2.20	1600	2.56	1668	2.93	1734	3.30

		4.00" SP		4.50" SP		5.00" SP		5.50" SP		6.00" SP		6.50" SP		7.00" SP		7.50" SP		8.00" SP	
CFM	OV	RPM	BHP	RPM	BHP	RPM	BHP	RPM	BHP	RPM	BHP	RPM	BHP	RPM	BHP	RPM	BHP	RPM	BHP
3734	1700	1669	2.92	1748	3.29	1835	3.68	1919	4.07										
3954	1800	1693	3.10	1770	3.48	1844	3.87	1926	4.28	2006	4.69								
4173	1900	1727	3.27	1793	3.68	1866	4.08	1937	4.49	2013	4.92	2090	5.36	2164	5.80				
4393	2000	1762	3.46	1827	3.88	1889	4.30	1959	4.73	2026	5.16	2097	5.60	2171	6.06	2242	6.52		
4613	2100	1799	3.68	1861	4.08	1923	4.52	1982	4.97	2048	5.41	2113	5.87	2178	6.33	2249	6.81	2318	7.29
4833	2200	1836	3.92	1898	4.32	1957	4.75	2016	5.21	2072	5.68	2135	6.14	2197	6.62	2257	7.10	2325	7.59
5052	2300	1876	4.17	1935	4.58	1993	5.01	2050	5.46	2106	5.94	2160	6.43	2219	6.92	2279	7.41	2337	7.91
5272	2400	1915	4.44	1974	4.86	2031	5.30	2086	5.74	2141	6.22	2194	6.72	2246	7.23	2302	7.74	2360	8.25
5492	2500	1957	4.72	2013	5.16	2069	5.60	2123	6.05	2176	6.51	2229	7.02	2280	7.54	2330	8.07	2382	8.60
5711	2600	1999	5.01	2054	5.47	2108	5.92	2161	6.39	2213	6.86	2264	7.34	2315	7.86	2365	8.40	2413	8.95
5931	2700	2044	5.32	2096	5.79	2148	6.26	2200	6.74	2251	7.22	2302	7.71	2350	8.21	2399	8.75	2447	9.31
6151	2800	2090	5.64	2139	6.12	2190	6.61	2240	7.10	2290	7.60	2339	8.10	2388	8.61	2435	9.13	2482	9.68
6370	2900	2136	5.97	2184	6.47	2233	6.98	2282	7.48	2330	8.00	2378	8.51	2425	9.03	2472	9.56	2518	10.09
6590	3000	2182	6.33	2230	6.84	2276	7.36	2324	7.88	2371	8.41	2418	8.93	2464	9.47	2510	10.00	2555	10.55
6810	3100	2229	6.70	2276	7.22	2322	7.76	2366	8.29	2413	8.83	2458	9.38	2504	9.92	2549	10.47	2593	11.03
7029	3200	2277	7.09	2323	7.62	2368	8.17	2412	8.72	2456	9.28	2500	9.83	2544	10.40	2588	10.96	2632	11.53
7249	3300	2324	7.49	2370	8.04	2415	8.60	2458	9.17	2500	9.74	2543	10.31	2586	10.89	2628	11.47	2671	12.05
7469	3400	2372	7.92	2417	8.48	2461	9.05	2504	9.63	2546	10.21	2586	10.81	2628	11.40	2670	11.99	2711	12.59
7688	3500	2423	8.36	2465	8.94	2508	9.52	2551	10.11	2592	10.71	2632	11.31	2671	11.92	2712	12.53	2753	13.14
7908	3600	2475	8.82	2513	9.42	2556	10.02	2598	10.62	2638	11.23	2678	11.84	2716	12.47	2755	13.09	2795	13.72

		9.00" SP		10.00" SP		11.00" SP		12.00" SP		13.00" SP		14.00" SP		15.00" SP		16.00" SP		17.00" SP	
CFM	OV	RPM	BHP	RPM	BHP	RPM	BHP	RPM	BHP	RPM	BHP	RPM	BHP	RPM	BHP	RPM	BHP	RPM	BHP
5492	2500	2493	9.67	2602	10.77	2721	11.91	2834	13.06										
5711	2600	2515	10.06	2620	11.17	2728	12.33	2841	13.52	2950	14.72								
5931	2700	2540	10.45	2642	11.60	2742	12.77	2848	13.97	2957	15.21	3061	16.46						
6151	2800	2574	10.85	2664	12.04	2764	13.23	2859	14.45	2963	15.71	3068	16.99	3169	18.28				
6370	2900	2608	11.26	2695	12.48	2786	13.71	2881	14.95	2973	16.21	3075	17.52	3176	18.85	3273	20.19		
6590	3000	2643	11.68	2730	12.92	2813	14.19	2903	15.47	2995	16.76	3083	18.06	3183	19.42	3280	20.80	3375	22.18
6810	3100	2679	12.16	2764	13.38	2847	14.68	2926	16.00	3017	17.32	3105	18.65	3190	20.00	3287	21.41	3382	22.83
7029	3200	2717	12.68	2799	13.86	2881	15.18	2961	16.52	3039	17.89	3127	19.25	3212	20.63	3294	22.02	3389	23.47
7249	3300	2755	13.22	2836	14.43	2916	15.69	2995	17.06	3071	18.45	3149	19.86	3234	21.27	3316	22.69	3396	24.13
7469	3400	2794	13.79	2874	15.01	2952	16.26	3030	17.62	3105	19.03	3178	20.47	3256	21.92	3338	23.37	3418	24.84
7688	3500	2833	14.38	2912	15.62	2989	16.89	3064	18.19	3140	19.63	3213	21.09	3283	22.58	3360	24.07	3440	25.56
7908	3600	2873	14.98	2951	16.25	3027	17.55	3102	18.86	3175	20.24	3247	21.73	3318	23.24	3386	24.77	3462	26.30
8128	3700	2915	15.61	2990	16.91	3065	18.22	3139	19.56	3211	20.92	3282	22.38	3352	23.92	3420	25.47	3487	27.05
8347	3800	2957	16.25	3030	17.58	3105	18.93	3177	20.28	3248	21.67	3317	23.07	3387	24.61	3455	26.19		
8567	3900	2999	16.91	3072	18.28	3144	19.65	3216	21.03	3286	22.44	3354	23.86	3422	25.32	3489	26.93		

Performance shown is for installation type B & D - Free or ducted inlet, Ducted outlet. Underlined ratings indicate maximum static efficiency. Power rating (BHP) does not include drive losses. Performance ratings do not include the effects of appurtenances in the airstream. NOTE: Ratings shown apply also to model QBCA.

CLASS 1 | CLASS 2 | CLASS 3

BCA-200 SINGLE WIDTH

CONSTANT SPEED PERFORMANCE CURVES

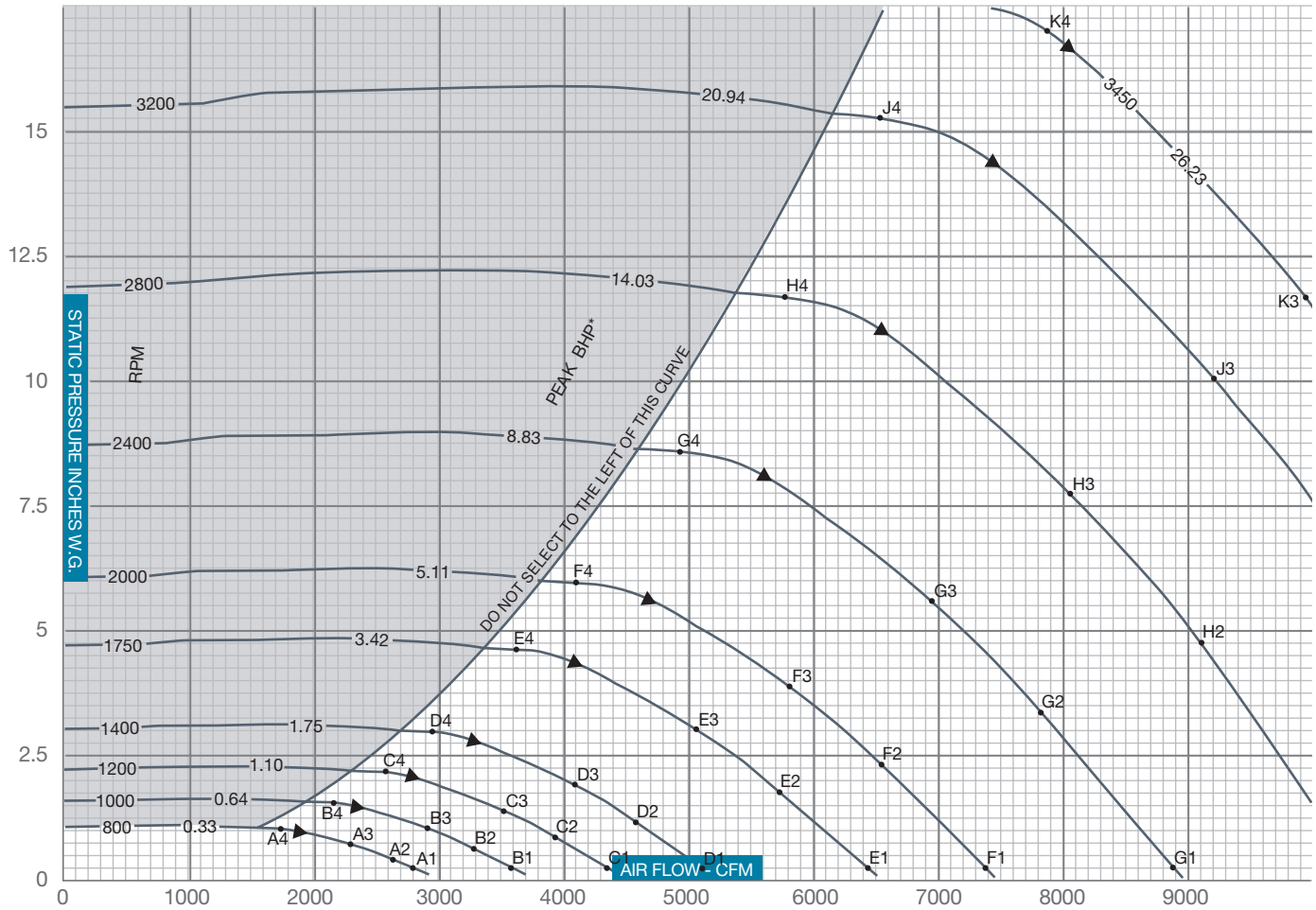

▲ PEAK STATIC EFFICIENCY
* Peak BHP does not include drive losses

$$\% \text{ STATIC EFFICIENCY} = \frac{\text{CFM x SP x .0157}}{\text{BHP}}$$

$$\text{Outlet Velocity (OV) in feet per minute} = \frac{\text{CFM}}{\text{Outlet Area}}$$

SOUND POWER LEVELS x 10^{-12} WATT

The sound power level ratings shown are in decibels, referred to 10^{-12} watts calculated per AMCA Standard 301. Values shown are for inlet L_{wi} sound power levels for installation Type B, free inlet, ducted outlet. Ratings do not include the effects of duct end correction.

FAN RPM	FAN SP	SOUND POINT	BAND / FREQUENCY 1 / 63	2 / 125	3 / 250	4 / 500	5 / 1000	6 / 2000	7 / 4000	8 / 8000
800	0.25	A1	70	77	74	70	68	65	61	57
	0.38	A2	70	77	74	70	68	65	61	57
	0.63	A3	70	77	74	70	68	65	61	56
	0.95	A4	70	77	73	70	68	65	61	56
1000	0.25	B1	77	82	80	76	74	71	67	63
	0.59	B2	77	82	80	76	74	71	67	63
	0.98	B3	77	81	81	76	74	71	67	63
	1.49	B4	76	81	80	76	73	71	67	62
1200	0.25	C1	83	85	86	81	78	76	72	68
	0.85	C2	83	85	86	81	78	76	72	68
	1.41	C3	84	85	86	82	78	76	72	68
	2.15	C4	83	84	86	81	78	76	72	67
1400	0.25	D1	88	88	91	86	82	80	77	72
	1.15	D2	89	87	91	86	82	80	76	72
	1.92	D3	89	87	91	86	82	80	76	72
	2.92	D4	89	87	90	85	81	80	76	72
1750	0.25	E1	96	92	97	93	87	86	83	78
	1.80	E2	97	91	97	92	87	86	83	78
	3.00	E3	98	91	97	93	87	86	83	78
	4.56	E4	98	91	97	92	87	85	82	78

FAN RPM	FAN SP	SOUND POINT	BAND / FREQUENCY 1 / 63	2 / 125	3 / 250	4 / 500	5 / 1000	6 / 2000	7 / 4000	8 / 8000
2000	0.25	F1	98	96	99	97	91	89	86	82
	2.35	F2	99	96	100	97	91	89	86	82
	3.92	F3	100	96	99	97	91	89	86	82
	5.96	F4	100	96	99	96	91	89	86	82
2400	0.25	G1	101	102	103	102	96	93	91	87
	3.39	G2	102	103	103	102	96	93	91	87
	5.65	G3	103	103	102	102	97	93	91	87
	8.58	G4	103	103	102	102	96	93	91	87
2800	0.25	H1	104	108	105	107	101	97	95	92
	4.61	H2	105	108	105	107	101	97	95	91
	7.69	H3	106	109	105	107	101	97	95	91
	11.68	H4	106	109	105	107	100	97	95	91
3200	0.25	J1	106	112	108	111	105	100	99	95
	6.02	J2	107	113	107	111	105	100	98	95
	10.04	J3	108	114	107	111	105	100	99	95
	15.26	J4	108	114	107	111	104	100	98	95
3450	0.25	K1	108	115	109	113	107	102	101	97
	7.00	K2	109	116	109	113	107	102	100	97
	11.67	K3	110	117	109	113	107	102	101	97
	17.00	K4	110	117	108	113	107	102	100	97

BCA-222 SINGLE WIDTH

WHEEL DIAMETER: 22.25"
WHEEL CIRCUMFERENCE: 5.83'
OUTLET AREA: 2.723 SQ. FT.
OUTLET SIZE: 17 11/16" X 22 3/16"
INLET DIAMETER: 23 1/2" O.D.

MAX SPEEDS	CLASS 1	CLASS 2	CLASS 3
Up to 250°F	1922	2508	3124
251°F to 400°F*	1826	2383	2968
401°F to 700°F*	1576	2056	2562
Above 700°F	CONTACT FACTORY		

*Special hi-temp construction required
Tip Speed (fpm) = 5.83 x RPM
Max BHP = 1.080 x $(RPM/1000)^3$

		.25" SP		.50" SP		.75" SP		1.00" SP		1.50" SP		2.00" SP		2.50" SP		3.00" SP		3.50" SP	
CFM	OV	RPM	BHP	RPM	BHP	RPM	BHP	RPM	BHP	RPM	BHP	RPM	BHP	RPM	BHP	RPM	BHP	RPM	BHP
1905	700	470	0.11	558	0.19	639	0.26												
2178	800	512	0.14	592	0.22	666	0.32												
2450	900	557	0.17	629	0.27	697	0.37	762	0.47										
2722	1000	604	0.21	669	0.31	732	0.42	792	0.54	906	0.75								
2994	1100	651	0.26	711	0.37	769	0.49	826	0.61	933	0.86								
3267	1200	700	0.31	754	0.43	809	0.56	862	0.69	963	0.97	1058	1.23						
3539	1300	749	0.37	800	0.50	850	0.64	900	0.77	995	1.07	1086	1.37	1172	1.64				
3811	1400	798	0.44	847	0.58	893	0.73	940	0.87	1030	1.18	1116	1.51	1199	1.82	1278	2.10		
4083	1500	848	0.52	894	0.67	937	0.83	981	0.98	1067	1.30	1149	1.64	1228	2.00	1304	2.32		
4356	1600	898	0.61	943	0.77	983	0.94	1024	1.10	1105	1.43	1184	1.79	1259	2.16	1332	2.53	1419	2.97
4628	1700	949	0.71	991	0.88	1030	1.05	1068	1.23	1145	1.58	1220	1.95	1292	2.34	1363	2.74	1447	3.19
4900	1800	999	0.83	1040	1.00	1078	1.18	1113	1.37	1186	1.74	1258	2.12	1327	2.52	1409	3.00	1475	3.42
5172	1900	1050	0.95	1089	1.14	1126	1.33	1160	1.52	1228	1.91	1297	2.31	1364	2.72	1442	3.23	1507	3.67
5445	2000	1101	1.09	1139	1.28	1174	1.48	1207	1.69	1272	2.10	1337	2.51	1411	3.00	1476	3.47	1540	3.93
5717	2100	1152	1.24	1189	1.44	1223	1.65	1255	1.86	1316	2.30	1379	2.73	1451	3.24	1513	3.71	1573	4.20

		4.00" SP		4.50" SP		5.00" SP		5.50" SP		6.00" SP		6.50" SP		7.00" SP		7.50" SP		8.00" SP	
CFM	OV	RPM	BHP	RPM	BHP	RPM	BHP	RPM	BHP	RPM	BHP	RPM	BHP	RPM	BHP	RPM	BHP	RPM	BHP
4628	1700	1515	3.61	1589	4.10	1662	4.62	1739	5.18	1812	5.77								
4900	1800	1541	3.85	1607	4.30	1677	4.82	1745	5.35	1817	5.95	1887	6.56	1955	7.19				
5172	1900	1570	4.11	1632	4.57	1694	5.05	1760	5.59	1824	6.14	1893	6.76	1960	7.40	2025	8.06		
5445	2000	1601	4.39	1661	4.86	1720	5.34	1778	5.84	1841	6.41	1902	6.99	1966	7.62	2031	8.29	2094	8.97
5717	2100	1634	4.68	1691	5.17	1749	5.67	1804	6.17	1859	6.68	1920	7.28	1978	7.89	2037	8.52	2100	9.22
5989	2200	1667	4.99	1724	5.50	1778	6.01	1833	6.53	1887	7.05	1938	7.59	1996	8.20	2053	8.84	2107	9.48
6262	2300	1701	5.31	1757	5.84	1811	6.37	1863	6.90	1915	7.45	1967	8.00	2016	8.55	2070	9.18	2125	9.83
6534	2400	1738	5.63	1790	6.19	1844	6.74	1895	7.30	1945	7.86	1995	8.42	2045	9.00	2092	9.58	2142	10.20
6806	2500	1774	5.97	1826	6.55	1877	7.14	1928	7.71	1977	8.28	2025	8.87	2073	9.46	2121	10.05	2167	10.66
7078	2600	1813	6.34	1863	6.93	1913	7.53	1961	8.14	2010	8.73	2057	9.33	2103	9.94	2150	10.55	2196	11.17
7351	2700	1852	6.72	1900	7.32	1949	7.94	1996	8.57	2043	9.20	2090	9.81	2136	10.44	2180	11.07	2224	11.70
7623	2800	1892	7.13	1940	7.74	1985	8.37	2032	9.01	2078	9.67	2123	10.32	2168	10.96	2212	11.60	2255	12.26
7895	2900	1933	7.55	1979	8.18	2024	8.82	2069	9.48	2114	10.15	2157	10.83	2201	11.50	2245	12.16	2287	12.83
8167	3000	1974	8.00	2019	8.65	2064	9.30	2107	9.97	2150	10.65	2193	11.35	2235	12.05	2278	12.74	2320	13.43
8440	3100	2016	8.46	2060	9.13	2104	9.80	2146	10.49	2187	11.18	2230	11.89	2271	12.61	2312	13.33	2353	14.05
8712	3200	2058	8.95	2101	9.63	2144	10.33	2186	11.03	2226	11.73	2267	12.45	2308	13.18	2348	13.93	2387	14.68
8984	3300	2100	9.46	2143	10.16	2185	10.87	2226	11.59	2266	12.31	2305	13.04	2344	13.78	2384	14.54	2423	15.31
9256	3400	2143	9.99	2185	10.71	2226	11.44	2266	12.18	2306	12.91	2345	13.66	2383	14.41	2421	15.18	2460	15.97
9529	3500	2187	10.55	2228	11.28	2268	12.03	2308	12.78	2346	13.54	2385	14.30	2422	15.07	2459	15.85	2496	16.65
9801	3600	2231	11.14	2271	11.88	2310	12.64	2349	13.41	2387	14.19	2425	14.97	2462	15.76	2498	16.55	2533	17.36

		9.00" SP		10.00" SP		11.00" SP		12.00" SP		13.00" SP		14.00" SP		15.00" SP		16.00" SP		17.00" SP	
CFM	OV	RPM	BHP	RPM	BHP	RPM	BHP	RPM	BHP	RPM	BHP	RPM	BHP	RPM	BHP	RPM	BHP	RPM	BHP
6806	2500	2264	11.98	2363	13.43	2465	14.99	2568	16.67	2666	18.38								
7078	2600	2284	12.42	2380	13.87	2475	15.38	2573	17.04	2672	18.78	2767	20.57						
7351	2700	2312	12.99	2398	14.33	2492	15.87	2582	17.44	2678	19.19	2773	21.00	2865	22.85	2954	24.74		
7623	2800	2341	13.58	2424	14.92	2509	16.37	2599	17.98	2686	19.61	2779	21.43	2871	23.31	2960	25.23	3046	27.19
7895	2900	2370	14.19	2453	15.57	2532	16.96	2617	18.52	2703	20.19	2786	21.88	2877	23.78	2966	25.72	3052	27.71
8167	3000	2402	14.82	2482	16.23	2561	17.66	2636	19.11	2720	20.77	2803	22.50	2883	24.25	2971	26.22	3057	28.23
8440	3100	2434	15.47	2511	16.92	2589	18.38	2665	19.87	2738	21.37	2821	23.13	2901	24.92	2978	26.73	3063	28.75
8712	3200	2467	16.15	2544	17.63	2618	19.13	2693	20.65	2766	22.18	2838	23.77	2918	25.59	2996	27.44	3071	29.31
8984	3300	2500	16.85	2576	18.36	2650	19.89	2722	21.45	2795	23.02	2865	24.61	2936	26.28	3013	28.16	3088	30.06
9256	3400	2534	17.56	2609	19.12	2682	20.69	2752	22.27	2823	23.88	2893	25.50	2961	27.14	3031	28.89	3105	30.83
9529	3500	2570	18.27	2642	19.90	2715	21.50	2785	23.12	2852	24.76	2922	26.42	2989	28.09	3054	29.78	3123	31.61
9801	3600	2606	19.01	2677	20.69	2748	22.35	2817	24.00	2885	25.67	2951	27.37	3018	29.07	3083	30.80	3146	32.54
10073	3700	2643	19.77	2713	21.48	2781	23.22	2850	24.91	2917	26.61	2982	28.34	3047	30.08	3112	31.84		
10345	3800	2680	20.56	2749	22.30	2816	24.08	2883	25.84	2950	27.58	3014	29.34	3077	31.11	3140	32.91		
10618	3900	2719	21.39	2786	23.15	2853	24.96	2917	26.79	2983	28.57	3047	30.36	3109	32.17				

Performance shown is for installation type B & D - Free or ducted inlet, Ducted outlet. Underlined ratings indicate maximum static efficiency. Power rating (BHP) does not include drive losses. Performance ratings do not include the effects of appurtenances in the airstream. NOTE: Ratings shown apply also to model QBCA.

CLASS 1 | CLASS 2 | CLASS 3

BCA-222 SINGLE WIDTH

CONSTANT SPEED PERFORMANCE CURVES

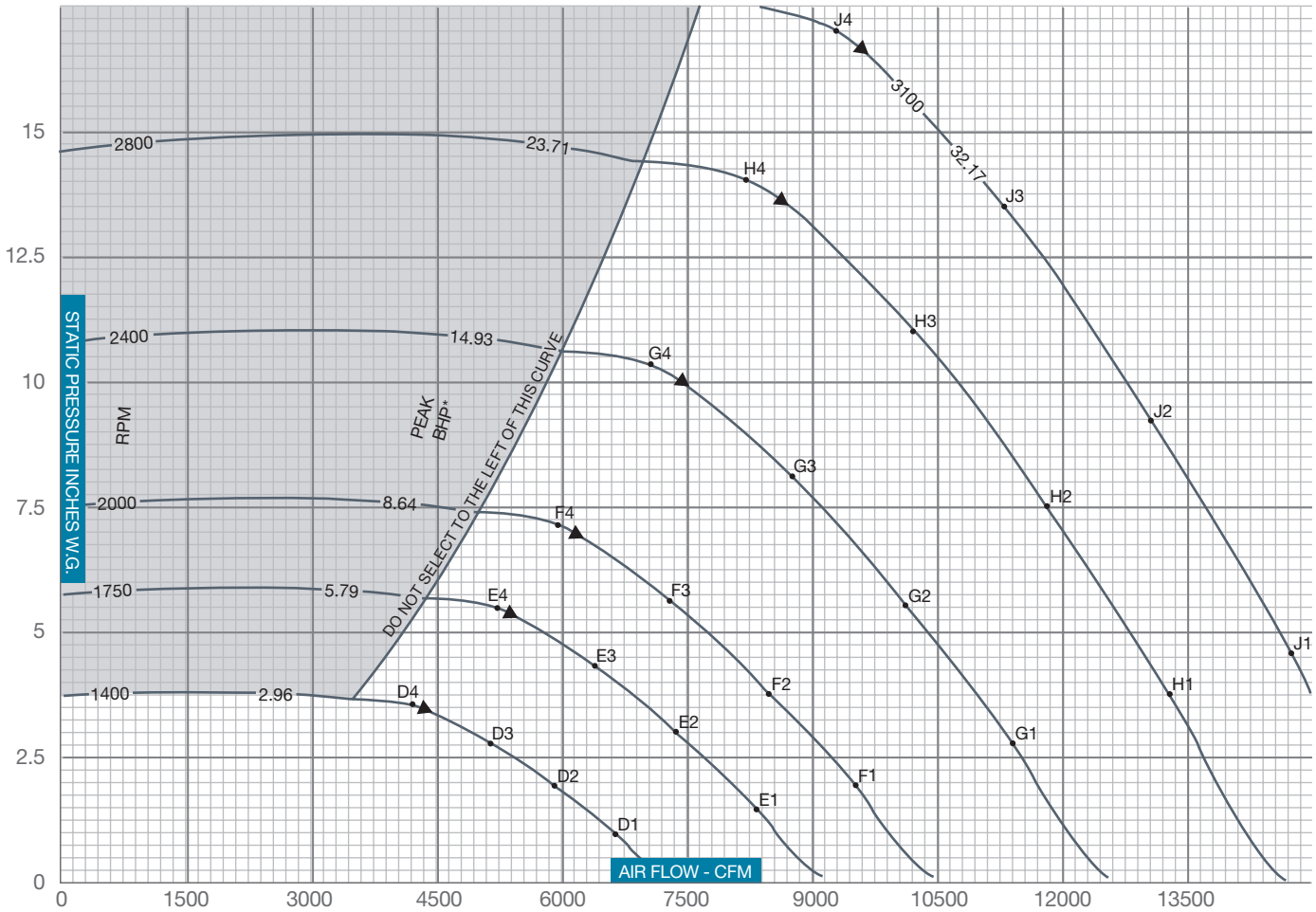

▲ PEAK STATIC EFFICIENCY
* Peak BHP does not include drive losses

$$\% \text{ STATIC EFFICIENCY} = \frac{\text{CFM x SP x .0157}}{\text{BHP}}$$

$$\text{Outlet Velocity (OV) in feet per minute} = \frac{\text{CFM}}{\text{Outlet Area}}$$

SOUND POWER LEVELS x 10^{-12} WATT

The sound power level ratings shown are in decibels, referred to 10^{-12} watts calculated per AMCA Standard 301. Values shown are for inlet L_{wi} sound power levels for installation Type B, free inlet, ducted outlet. Ratings do not include the effects of duct end correction.

FAN RPM	FAN SP	SOUND POINT	BAND / FREQUENCY 1 / 63	2 / 125	3 / 250	4 / 500	5 / 1000	6 / 2000	7 / 4000	8 / 8000
1400	0.94	D1	85	86	92	84	79	76	70	63
	1.88	D2	84	86	89	82	78	74	68	62
	2.76	D3	83	85	89	82	77	74	68	62
	3.50	D4	81	84	89	80	76	73	67	61
1750	1.47	E1	89	92	96	92	85	82	77	70
	2.94	E2	88	92	94	89	84	80	75	69
	4.31	E3	87	91	93	89	83	80	75	69
	5.47	E4	85	89	93	88	82	79	74	68
2000	1.92	F1	91	95	98	96	89	85	81	74
	3.84	F2	90	95	96	94	88	84	79	73
	5.63	F3	89	94	96	94	87	83	79	73
	7.14	F4	87	92	95	93	86	82	78	72

FAN RPM	FAN SP	SOUND POINT	BAND / FREQUENCY 1 / 63	2 / 125	3 / 250	4 / 500	5 / 1000	6 / 2000	7 / 4000	8 / 8000
2400	2.76	G1	94	100	101	103	95	90	86	80
	5.53	G2	93	99	100	100	93	89	84	78
	8.11	G3	92	98	99	100	93	88	84	78
	10.29	G4	90	97	99	99	91	87	83	77
2800	3.76	H1	97	104	104	108	99	94	91	85
	7.53	H2	96	103	103	105	97	93	89	83
	11.03	H3	95	102	102	105	97	92	89	83
	14.00	H4	93	100	102	105	95	91	88	82
3100	4.61	J1	99	106	106	110	103	97	94	88
	9.23	J2	98	105	106	107	100	96	92	86
	13.52	J3	97	104	105	107	100	95	92	86
	17.00	J4	95	102	104	107	99	94	91	85

BCA-245 SINGLE WIDTH

WHEEL DIAMETER: 24.50"
WHEEL CIRCUMFERENCE: 6.41'
OUTLET AREA: 3.304 SQ. FT.
OUTLET SIZE: 19 7/16" X 24 1/2"
INLET DIAMETER: 26 1/2" O.D.

MAX SPEEDS	CLASS 1	CLASS 2	CLASS 3
Up to 250°F	1745	2278	2837
251°F to 400°F*	1658	2164	2695
401°F to 700°F*	1431	1868	2326
Above 700°F	CONTACT FACTORY		

*Special hi-temp construction required
Tip Speed (fpm) = 6.41 x RPM
Max BHP = 1.748 x $(RPM/1000)^3$

		.25" SP		.50" SP		.75" SP		1.00" SP		1.50" SP		2.00" SP		2.50" SP		3.00" SP		3.50" SP	
CFM	OV	RPM	BHP	RPM	BHP	RPM	BHP	RPM	BHP	RPM	BHP	RPM	BHP	RPM	BHP	RPM	BHP	RPM	BHP
2310	700	427	0.13	507	0.23	580	0.32												
2640	800	465	0.17	537	0.27	605	0.38												
2970	900	506	0.21	571	0.32	633	0.45	692	0.57										
3301	1000	548	0.26	607	0.38	665	0.51	720	0.65	823	0.91								
3631	1100	592	0.31	645	0.45	699	0.59	750	0.74	847	1.05								
3961	1200	636	0.38	685	0.53	735	0.68	783	0.83	874	1.17	961	1.49						
4291	1300	680	0.45	726	0.61	772	0.77	817	0.94	904	1.30	986	1.66	1064	1.99				
4621	1400	725	0.54	769	0.71	811	0.88	854	1.06	936	1.43	1014	1.83	1089	2.21	1160	2.55		
4951	1500	770	0.63	812	0.82	851	1.00	891	1.19	969	1.58	1043	1.99	1115	2.42	1184	2.81		
5281	1600	816	0.74	856	0.94	893	1.14	930	1.33	1004	1.74	1075	2.17	1143	2.62	1210	3.07	1274	3.48
5611	1700	861	0.86	900	1.07	936	1.28	970	1.49	1040	1.91	1108	2.36	1174	2.83	1237	3.32	1314	3.86
5941	1800	907	1.00	945	1.22	979	1.44	1011	1.66	1077	2.11	1142	2.57	1205	3.05	1267	3.57	1340	4.15
6272	1900	954	1.15	990	1.38	1023	1.61	1054	1.85	1116	2.32	1178	2.80	1239	3.30	1309	3.92	1369	4.45
6602	2000	1000	1.32	1035	1.56	1066	1.80	1096	2.05	1155	2.54	1215	3.04	1273	3.56	1341	4.20	1398	4.76
6932	2100	1047	1.50	1080	1.75	1111	2.00	1140	2.26	1195	2.79	1252	3.31	1318	3.93	1374	4.50	1429	5.10

		4.00" SP		4.50" SP		5.00" SP		5.50" SP		6.00" SP		6.50" SP		7.00" SP		7.50" SP		8.00" SP	
CFM	OV	RPM	BHP	RPM	BHP	RPM	BHP	RPM	BHP	RPM	BHP	RPM	BHP	RPM	BHP	RPM	BHP	RPM	BHP
5611	1700	1376	4.38	1443	4.97	1510	5.60	1579	6.29	1645	6.99								
5941	1800	1400	4.67	1459	5.22	1523	5.84	1584	6.49	1651	7.22	1714	7.96	1775	8.72				
6272	1900	1426	4.99	1482	5.54	1538	6.12	1599	6.78	1657	7.45	1719	8.20	1780	8.98	1839	9.77		
6602	2000	1454	5.32	1508	5.89	1562	6.47	1615	7.08	1672	7.77	1728	8.48	1786	9.24	1845	10.05	1902	10.88
6932	2100	1484	5.68	1536	6.27	1588	6.87	1639	7.48	1688	8.11	1744	8.83	1797	9.56	1850	10.33	1907	11.17
7262	2200	1513	6.05	1565	6.66	1615	7.29	1665	7.92	1713	8.55	1760	9.20	1813	9.95	1864	10.71	1914	11.49
7592	2300	1545	6.43	1595	7.08	1644	7.72	1692	8.37	1739	9.03	1786	9.70	1831	10.37	1880	11.13	1930	11.92
7922	2400	1578	6.83	1626	7.51	1674	8.18	1721	8.85	1766	9.53	1812	10.21	1857	10.91	1900	11.61	1945	12.37
8252	2500	1611	7.24	1659	7.94	1704	8.65	1751	9.34	1796	10.04	1839	10.75	1883	11.47	1926	12.19	1968	12.92
8582	2600	1646	7.68	1692	8.40	1737	9.13	1781	9.87	1825	10.59	1868	11.31	1910	12.05	1952	12.79	1994	13.54
8912	2700	1682	8.15	1726	8.88	1770	9.63	1813	10.39	1855	11.15	1898	11.90	1939	12.66	1980	13.42	2020	14.19
9243	2800	1719	8.64	1761	9.39	1803	10.15	1846	10.93	1887	11.72	1928	12.51	1969	13.29	2009	14.07	2048	14.86
9573	2900	1755	9.16	1797	9.92	1838	10.70	1879	11.49	1920	12.31	1959	13.13	1999	13.94	2039	14.75	2077	15.56
9903	3000	1793	9.70	1834	10.48	1874	11.28	1913	12.09	1953	12.92	1992	13.76	2030	14.61	2069	15.45	2107	16.28
10233	3100	1831	10.26	1871	11.07	1910	11.89	1949	12.71	1986	13.55	2025	14.41	2063	15.28	2100	16.17	2137	17.03
10563	3200	1869	10.85	1908	11.68	1947	12.52	1985	13.37	2022	14.22	2058	15.09	2096	15.98	2132	16.89	2168	17.80
10893	3300	1908	11.47	1946	12.32	1984	13.18	2021	14.05	2058	14.93	2094	15.81	2129	16.71	2165	17.63	2201	18.56
11223	3400	1946	12.11	1985	12.98	2022	13.87	2058	14.76	2094	15.66	2129	16.56	2164	17.48	2199	18.41	2234	19.36
11553	3500	1986	12.79	2023	13.68	2060	14.58	2096	15.50	2131	16.42	2166	17.34	2200	18.28	2233	19.22	2267	20.18
11883	3600	2026	13.51	2062	14.41	2098	15.33	2134	16.26	2168	17.21	2202	18.16	2236	19.11	2269	20.07	2301	21.04

		9.00" SP		10.00" SP		11.00" SP		12.00" SP		13.00" SP		14.00" SP		15.00" SP		16.00" SP		17.00" SP	
CFM	OV	RPM	BHP	RPM	BHP	RPM	BHP	RPM	BHP	RPM	BHP	RPM	BHP	RPM	BHP	RPM	BHP	RPM	BHP
8252	2500	2056	14.53	2146	16.28	2238	18.17	2332	20.21	2422	22.29								
8582	2600	2074	15.06	2162	16.82	2247	18.65	2337	20.66	2427	22.77	2513	24.94						
8912	2700	2100	15.75	2178	17.38	2263	19.24	2345	21.15	2432	23.26	2519	25.46	2602	27.71	2683	30.00		
9243	2800	2126	16.47	2202	18.09	2279	19.85	2361	21.80	2439	23.78	2524	25.99	2607	28.27	2688	30.59	2766	32.96
9573	2900	2152	17.20	2227	18.87	2300	20.57	2376	22.46	2455	24.47	2530	26.53	2613	28.83	2693	31.19	2771	33.59
9903	3000	2181	17.97	2254	19.68	2325	21.41	2394	23.17	2471	25.19	2546	27.28	2619	29.41	2699	31.79	2777	34.23
10233	3100	2211	18.76	2281	20.51	2351	22.29	2420	24.09	2486	25.91	2562	28.05	2634	30.21	2705	32.41	2782	34.86
10563	3200	2240	19.58	2310	21.37	2378	23.19	2446	25.03	2512	26.89	2578	28.83	2650	31.03	2720	33.27	2789	35.54
10893	3300	2270	20.43	2340	22.26	2406	24.12	2472	26.00	2538	27.91	2602	29.83	2666	31.87	2736	34.14	2804	36.45
11223	3400	2301	21.29	2369	23.18	2436	25.08	2500	27.01	2564	28.95	2627	30.92	2689	32.91	2752	35.03	2820	37.38
11553	3500	2334	22.15	2400	24.13	2465	26.07	2529	28.04	2590	30.03	2653	32.03	2715	34.06	2774	36.11	2836	38.32
11883	3600	2367	23.04	2431	25.08	2495	27.09	2559	29.10	2620	31.13	2680	33.18	2741	35.25	2800	37.34	2857	39.45
12214	3700	2400	23.97	2464	26.05	2525	28.15	2588	30.20	2649	32.27	2708	34.36	2767	36.47	2826	38.60		
12544	3800	2434	24.93	2497	27.04	2558	29.19	2618	31.33	2679	33.44	2737	35.57	2794	37.72	2852	39.90		
12874	3900	2470	25.93	2530	28.07	2591	30.26	2649	32.48	2709	34.64	2767	36.82	2824	39.01				

Performance shown is for installation type B & D - Free or ducted inlet, Ducted outlet. Underlined ratings indicate maximum static efficiency. Power rating (BHP) does not include drive losses. Performance ratings do not include the effects of appurtenances in the airstream. NOTE: Ratings shown apply also to model QBCA.

CLASS 1 | CLASS 2 | CLASS 3

BCA-245 SINGLE WIDTH

CONSTANT SPEED PERFORMANCE CURVES

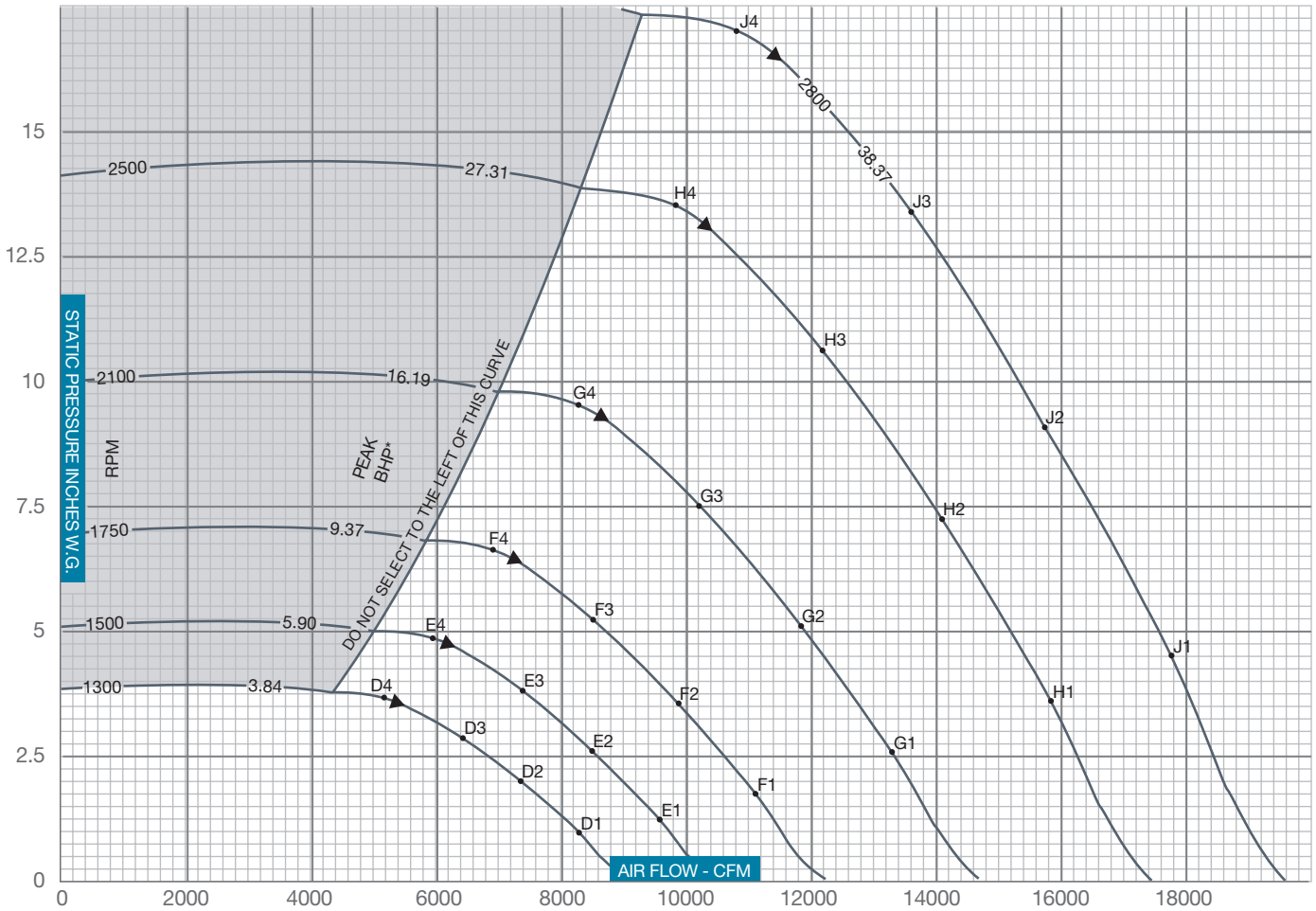

▲ PEAK STATIC EFFICIENCY
* Peak BHP does not include drive losses

$$\% \text{ STATIC EFFICIENCY} = \frac{\text{CFM x SP x .0157}}{\text{BHP}}$$

$$\text{Outlet Velocity (OV) in feet per minute} = \frac{\text{CFM}}{\text{Outlet Area}}$$

SOUND POWER LEVELS x 10^{-12} WATT

The sound power level ratings shown are in decibels, referred to 10^{-12} watts calculated per AMCA Standard 301. Values shown are for inlet L_{wi} sound power levels for installation Type B, free inlet, ducted outlet. Ratings do not include the effects of duct end correction.

FAN RPM	FAN SP	SOUND POINT	BAND / FREQUENCY 1 / 63	2 / 125	3 / 250	4 / 500	5 / 1000	6 / 2000	7 / 4000	8 / 8000
1300	0.98	D1	87	88	93	85	80	75	71	64
	1.97	D2	85	87	90	83	78	75	69	63
	2.88	D3	85	87	90	83	78	75	69v	63
	3.66	D4	83	86	89	81	77	74	68	62
1500	1.31	E1	90	91	96	89	84	81	75	68
	2.62	E2	89	91	94	87	83	79	73	67
	3.84	E3	88	90	93	87	82	79	73	67
	4.87	E4	86	89	93	85	81	78	72	66
1750	1.78	F1	92	95	99	95	88	85	80	73
	3.56	F2	91	95	97	92	87	83	78	72
	5.23	F3	90	94	96	92	86	83	78	72
	6.63	F4	88	93	96	91	85	82	77	71

FAN RPM	FAN SP	SOUND POINT	BAND / FREQUENCY 1 / 63	2 / 125	3 / 250	4 / 500	5 / 1000	6 / 2000	7 / 4000	8 / 8000
2100	2.57	G1	96	100	102	101	94	90	85	79
	5.13	G2	95	99	101	98	92	88	83	77
	7.53	G3	94	98	100	98	92	88	83	77
	9.55	G4	92	97	99	98	90	87	82	76
2500	3.64	H1	95	105	105	107	99	94	91	84
	7.27	H2	95	104	104	104	97	93	89	83
	10.66	H3	97	103	103	104	97	92	89	83
	13.54	H4	95	101	103	104	95	91	88	82
2800	4.56	J1	101	107	107	111	102	97	94	88
	9.13	J2	100	106	107	108	100	96	92	86
	13.38	J3	99	105	106	108	100	95	92	86
	16.98	J4	97	103	105	108	98	94	91	85

BCA-270 SINGLE WIDTH

WHEEL DIAMETER: 27.00"
WHEEL CIRCUMFERENCE: 7.10'
OUTLET AREA: 4.016 SQ. FT.
OUTLET SIZE: 21 7/16" X 27"
INLET DIAMETER: 28½" O.D.

MAX SPEEDS	CLASS 1	CLASS 2	CLASS 3
Up to 250°F	1584	2067	2574
251°F to 400°F*	1505	1964	2445
401°F to 700°F*	1299	1695	2111
Above 700°F	CONTACT FACTORY		

*Special hi-temp construction required
Tip Speed (fpm) = 7.10 x RPM
Max BHP = 2.842 x $(RPM/1000)^3$

		.25" SP		.50" SP		.75" SP		1.00" SP		1.50" SP		2.00" SP		2.50" SP		3.00" SP		3.50" SP	
CFM	OV	RPM	BHP	RPM	BHP	RPM	BHP	RPM	BHP	RPM	BHP	RPM	BHP	RPM	BHP	RPM	BHP	RPM	BHP
2806	700	387	0.16	460	0.28	526	0.39												
3207	800	422	0.20	488	0.33	549	0.47												
3608	900	459	0.25	518	0.39	575	0.54	628	0.69										
4009	1000	497	0.31	551	0.46	603	0.62	653	0.79	747	1.11								
4410	1100	537	0.38	586	0.54	634	0.72	681	0.90	769	1.27								
4811	1200	577	0.46	622	0.64	667	0.82	710	1.01	793	1.42	872	1.81						
5211	1300	617	0.55	659	0.74	701	0.94	742	1.14	820	1.57	895	2.02	966	2.41				
5612	1400	658	0.65	698	0.86	736	1.07	775	1.28	849	1.73	920	2.22	999	2.75	1071	3.31		
6013	1500	699	0.77	737	0.99	773	1.22	809	1.44	879	1.91	947	2.42	1022	2.99	1086	3.52	1155	4.14
6414	1600	740	0.90	777	1.14	810	1.38	844	1.62	911	2.11	975	2.63	1048	3.24	1110	3.80	1169	4.38
6815	1700	782	1.05	817	1.30	849	1.55	880	1.81	944	2.33	1013	2.94	1075	3.52	1134	4.10	1192	4.69
7216	1800	823	1.22	857	1.48	888	1.74	918	2.02	978	2.56	1044	3.19	1103	3.81	1161	4.42	1216	5.04
7617	1900	865	1.40	898	1.67	928	1.95	956	2.24	1018	2.87	1076	3.47	1133	4.11	1188	4.76	1242	5.40
8018	2000	907	1.60	939	1.89	968	2.18	995	2.48	1053	3.14	1109	3.77	1163	4.42	1217	5.10	1269	5.78
8419	2100	950	1.82	980	2.12	1008	2.43	1030	2.80	1088	3.43	1143	4.09	1196	4.77	1247	5.47	1296	6.19

		4.00" SP		4.50" SP		5.00" SP		5.50" SP		6.00" SP		6.50" SP		7.00" SP		7.50" SP		8.00" SP	
CFM	OV	RPM	BHP	RPM	BHP	RPM	BHP	RPM	BHP	RPM	BHP	RPM	BHP	RPM	BHP	RPM	BHP	RPM	BHP
6815	1700	1249	5.32	1310	6.04	1370	6.80	1433	7.63	1493	8.49								
7216	1800	1270	5.67	1324	6.34	1382	7.10	1438	7.88	1498	8.76	1555	9.67	1611	10.59				
7617	1900	1294	6.06	1345	6.73	1396	7.43	1451	8.23	1503	9.05	1560	9.96	1616	10.90	1669	11.87		
8018	2000	1319	6.47	1369	7.16	1417	7.86	1465	8.60	1517	9.44	1568	10.29	1620	11.22	1674	12.21	1726	13.21
8419	2100	1346	6.90	1394	7.61	1441	8.34	1487	9.08	1532	9.84	1582	10.72	1630	11.62	1679	12.55	1730	13.57
8820	2200	1373	7.35	1420	8.09	1466	8.85	1511	9.61	1555	10.39	1597	11.17	1645	12.08	1691	13.01	1737	13.96
9221	2300	1402	7.81	1448	8.60	1492	9.38	1535	10.17	1578	10.97	1621	11.78	1661	12.59	1706	13.51	1751	14.48
9622	2400	1432	8.29	1475	9.12	1519	9.93	1562	10.74	1603	11.57	1644	12.40	1685	13.25	1724	14.10	1765	15.02
10022	2500	1462	8.80	1505	9.65	1546	10.51	1589	11.35	1629	12.20	1669	13.06	1709	13.93	1748	14.81	1786	15.69
10423	2600	1494	9.33	1535	10.20	1576	11.09	1616	11.98	1656	12.86	1695	13.74	1733	14.64	1771	15.54	1809	16.45
10824	2700	1527	9.90	1566	10.78	1606	11.69	1645	12.62	1684	13.54	1722	14.45	1760	15.37	1796	16.30	1833	17.24
11225	2800	1559	10.50	1598	11.40	1636	12.32	1675	13.27	1712	14.24	1749	15.19	1787	16.14	1823	17.09	1858	18.05
11626	2900	1593	11.12	1631	12.05	1668	12.99	1705	13.96	1742	14.95	1778	15.95	1814	16.93	1850	17.91	1885	18.90
12027	3000	1627	11.78	1664	12.73	1701	13.70	1736	14.68	1772	15.69	1808	16.71	1842	17.74	1877	18.76	1912	19.77
12428	3100	1661	12.46	1698	13.45	1733	14.44	1768	15.44	1802	16.46	1838	17.50	1872	18.56	1905	19.63	1939	20.69
12829	3200	1696	13.18	1732	14.19	1767	15.21	1801	16.24	1835	17.28	1868	18.33	1902	19.41	1935	20.51	1967	21.61
13230	3300	1731	13.93	1766	14.96	1800	16.01	1834	17.06	1867	18.13	1900	19.20	1932	20.30	1965	21.42	1997	22.55
13631	3400	1766	14.71	1801	15.77	1835	16.84	1867	17.93	1900	19.02	1932	20.12	1963	21.23	1995	22.36	2027	23.51
14032	3500	1802	15.54	1836	16.61	1869	17.71	1902	18.82	1933	19.94	1965	21.06	1996	22.20	2026	23.34	2057	24.51
14433	3600	1838	16.40	1871	17.50	1904	18.62	1936	19.75	1967	20.90	1998	22.05	2029	23.21	2059	24.38	2088	25.56

		9.00" SP		10.00" SP		11.00" SP		12.00" SP		13.00" SP		14.00" SP		15.00" SP		16.00" SP		17.00" SP	
CFM	OV	RPM	BHP	RPM	BHP	RPM	BHP	RPM	BHP	RPM	BHP	RPM	BHP	RPM	BHP	RPM	BHP	RPM	BHP
10022	2500	1866	17.64	1947	19.77	2031	22.07	2116	24.54	2197	27.07								
10423	2600	1882	18.30	1962	20.43	2039	22.65	2121	25.09	2202	27.66	2281	30.29						
10824	2700	1905	19.13	1976	21.10	2054	23.37	2128	25.69	2207	28.25	2285	30.92	2361	33.65	2434	36.44		
11225	2800	1929	20.00	1998	21.98	2068	24.11	2142	26.47	2213	28.88	2290	31.56	2366	34.33	2439	37.15	2510	40.03
11626	2900	1953	20.89	2021	22.92	2087	24.98	2156	27.27	2227	29.72	2296	32.22	2371	35.01	2444	37.88	2515	40.80
12027	3000	1979	21.82	2045	23.90	2110	26.01	2173	28.14	2242	30.59	2310	33.13	2376	35.72	2449	38.61	2520	41.57
12428	3100	2006	22.78	2070	24.91	2134	27.07	2196	29.26	2256	31.47	2324	34.06	2390	36.69	2454	39.36	2524	42.34
12829	3200	2033	23.78	2096	25.96	2158	28.17	2220	30.40	2279	32.66	2339	35.01	2405	37.69	2469	40.40	2530	43.16
13230	3300	2060	24.81	2123	27.04	2184	29.29	2243	31.58	2303	33.89	2361	36.23	2419	38.70	2483	41.47	2545	44.27
13631	3400	2088	25.85	2150	28.15	2210	30.46	2268	32.80	2327	35.16	2384	37.55	2440	39.96	2497	42.54	2559	45.39
14032	3500	2118	26.90	2177	29.31	2237	31.66	2295	34.05	2351	36.47	2408	38.90	2463	41.37	2517	43.86	2574	46.54
14433	3600	2148	27.99	2206	30.46	2264	32.91	2322	35.34	2377	37.81	2432	40.30	2487	42.81	2541	45.35	2593	47.91
14833	3700	2178	29.11	2236	31.63	2292	34.19	2349	36.67	2404	39.19	2457	41.73	2511	44.29	2564	46.88		
15234	3800	2208	30.27	2266	32.84	2321	35.45	2376	38.05	2431	40.61	2484	43.20	2536	45.82	2588	48.46		
15635	3900	2241	31.50	2296	34.09	2351	36.75	2404	39.44	2458	42.07	2511	44.71	2562	47.38				

Performance shown is for installation type B & D - Free or ducted inlet, Ducted outlet. Underlined ratings indicate maximum static efficiency. Power rating (BHP) does not include drive losses. Performance ratings do not include the effects of appurtenances in the airstream. NOTE: Ratings shown apply also to model QBCA.

CLASS 1 | CLASS 2 | CLASS 3

BCA-270 SINGLE WIDTH

CONSTANT SPEED PERFORMANCE CURVES

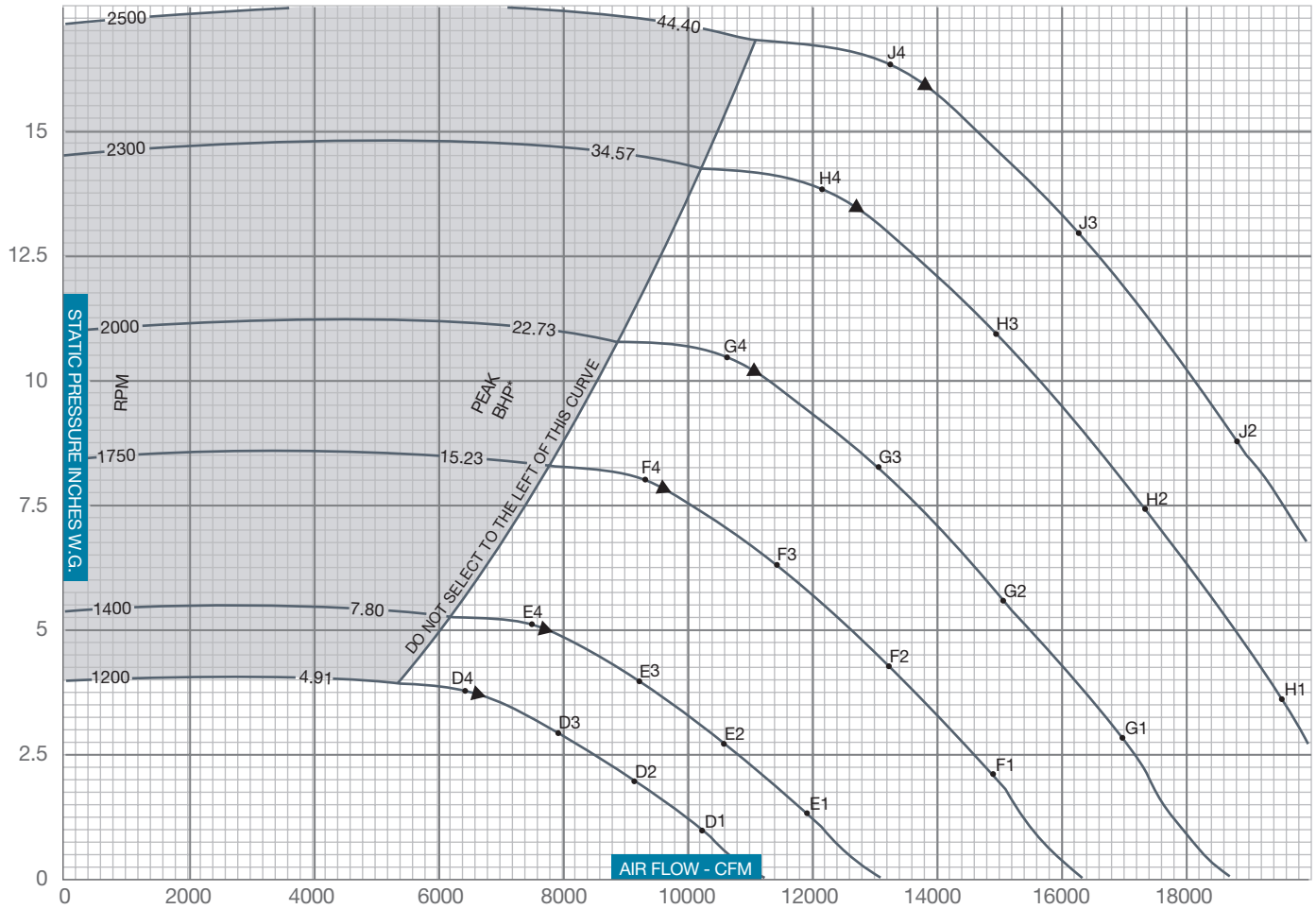

▲ PEAK STATIC EFFICIENCY
* Peak BHP does not include drive losses

$$\%\,\text{STATIC EFFICIENCY} = \frac{\text{CFM x SP x .0157}}{\text{BHP}}$$

$$\text{Outlet Velocity (OV) in feet per minute} = \frac{\text{CFM}}{\text{Outlet Area}}$$

SOUND POWER LEVELS x 10^{-12} WATT

The sound power level ratings shown are in decibels, referred to 10^{-12} watts calculated per AMCA Standard 301. Values shown are for inlet L_{wi} sound power levels for installation Type B, free inlet, ducted outlet. Ratings do not include the effects of duct end correction.

FAN RPM	FAN SP	SOUND POINT	BAND / FREQUENCY 1 / 63	2 / 125	3 / 250	4 / 500	5 / 1000	6 / 2000	7 / 4000	8 / 8000
1200	1.02	D1	88	90	93	85	81	77	71	64
	2.04	D2	87	90	90	84	80	75	69	63
	2.98	D3	86	89	90	83	79	75	69	63
	3.79	D4	85	88	90	82	78	74	68	62
1400	1.39	E1	92	93	98	90	85	82	76	69
	2.77	E2	91	93	95	88	84	80	74	68
	4.06	E3	90	92	95	88	83	80	74	68
	5.16	E4	88	91	95	86	82	79	73	67
1750	2.16	F1	96	99	102	98	91	88	83	76
	4.33	F2	95	98	100	95	90	86	81	75
	6.35	F3	94	97	100	95	89	86	81	75
	8.05	F4	92	96	99	94	88	85	80	74

FAN RPM	FAN SP	SOUND POINT	BAND / FREQUENCY 1 / 63	2 / 125	3 / 250	4 / 500	5 / 1000	6 / 2000	7 / 4000	8 / 8000
2000	2.83	G1	98	102	104	102	95	91	87	80
	5.65	G2	97	102	103	100	94	90	85	79
	8.29	G3	96	101	102	100	93	89	85	79
	10.52	G4	94	99	102	99	92	88	84	78
2300	3.74	H1	101	106	107	107	99	95	91	85
	7.48	H2	100	105	106	104	98	94	89	83
	10.96	H3	99	104	105	104	97	93	89	83
	13.91	H4	97	102	104	104	96	92	88	82
2500	4.42	J1	102	108	108	110	102	97	93	87
	8.84	J2	101	107	107	107	100	96	91	85
	12.95	J3	100	106	107	107	100	95	91	85
	16.44	J4	98	104	106	107	98	94	90	84

BCA-300 SINGLE WIDTH

WHEEL DIAMETER: 30.00"
WHEEL CIRCUMFERENCE: 7.85'
OUTLET AREA: 4.957 SQ. FT.
OUTLET SIZE: 23 13/16" X 30"
INLET DIAMETER: 31½" O.D.

MAX SPEEDS	CLASS 1	CLASS 2	CLASS 3
Up to 250°F	1429	1864	2482
251°F to 400°F*	1358	1771	2358
401°F to 700°F*	1172	1528	2035
Above 700°F	CONTACT FACTORY		

*Special hi-temp construction required
Tip Speed (fpm) = 7.85 x RPM
Max BHP = 4.589 x (RPM/1000)^3

		0.25" SP		0.50" SP		0.75" SP		1.00" SP		1.50" SP		2.00" SP		2.50" SP		3.00" SP		3.50" SP	
CFM	OV	RPM	BHP	RPM	BHP	RPM	BHP	RPM	BHP	RPM	BHP	RPM	BHP	RPM	BHP	RPM	BHP	RPM	BHP
3470	700	352	0.19	420	0.34	485	0.50	555	0.69										
3965	800	382	0.24	444	0.40	501	0.57	559	0.77										
4461	900	414	0.30	472	0.47	524	0.66	573	0.86	681	1.31								
4957	1000	448	0.37	501	0.56	549	0.76	596	0.97	686	1.43	785	1.97						
5453	1100	482	0.46	530	0.65	577	0.87	620	1.09	701	1.57	788	2.11	877	2.72				
5948	1200	517	0.55	562	0.76	606	0.99	647	1.23	724	1.74	797	2.28	880	2.90	960	3.56		
6444	1300	553	0.65	595	0.89	635	1.12	675	1.38	748	1.92	816	2.49	887	3.10	964	3.78	1037	4.50
6940	1400	589	0.77	628	1.04	666	1.28	704	1.55	773	2.11	840	2.71	901	3.33	969	4.01	1041	4.75
7436	1500	625	0.91	662	1.20	699	1.46	733	1.73	801	2.32	863	2.95	923	3.60	981	4.28	1046	5.02
7931	1600	662	1.06	697	1.37	731	1.65	764	1.94	829	2.55	888	3.21	947	3.89	1002	4.59	1057	5.33
8427	1700	699	1.22	732	1.56	765	1.87	796	2.17	858	2.80	916	3.49	971	4.20	1025	4.93	1075	5.68
8923	1800	736	1.41	768	1.76	798	2.11	829	2.42	887	3.07	944	3.78	996	4.52	1049	5.28	1098	6.06
9418	1900	773	1.62	804	1.99	832	2.37	862	2.69	917	3.36	972	4.10	1024	4.87	1073	5.66	1122	6.47
9914	2000	811	1.85	840	2.23	868	2.63	896	2.99	949	3.69	1001	4.44	1052	5.24	1099	6.06	1146	6.90
10410	2100	848	2.10	877	2.50	903	2.92	929	3.32	981	4.04	1030	4.81	1080	5.63	1127	6.48	1170	7.35

		4.00" SP		4.50" SP		5.00" SP		5.50" SP		6.00" SP		6.50" SP		7.00" SP		7.50" SP		8.00" SP	
CFM	OV	RPM	BHP	RPM	BHP	RPM	BHP	RPM	BHP	RPM	BHP	RPM	BHP	RPM	BHP	RPM	BHP	RPM	BHP
8427	1700	1128	6.47	1186	7.32	1245	8.21	1303	9.13	1358	10.09								
8923	1800	1146	6.86	1196	7.70	1250	8.61	1306	9.54	1362	10.51	1415	11.51	1466	12.53				
9418	1900	1169	7.30	1214	8.15	1261	9.04	1313	9.98	1365	10.96	1418	11.98	1469	13.03	1519	14.09	1566	15.18
9914	2000	1192	7.76	1236	8.63	1279	9.53	1324	10.46	1373	11.46	1421	12.47	1472	13.54	1522	14.62	1570	15.74
10410	2100	1216	8.24	1259	9.14	1301	10.07	1342	11.01	1384	11.98	1431	13.02	1477	14.08	1525	15.18	1573	16.31
10906	2200	1240	8.75	1283	9.68	1324	10.63	1364	11.60	1403	12.58	1443	13.59	1487	14.67	1531	15.78	1576	16.92
11401	2300	1266	9.28	1307	10.24	1348	11.22	1387	12.22	1425	13.23	1462	14.26	1500	15.30	1541	16.42	1584	17.57
11897	2400	1294	9.84	1332	10.83	1372	11.84	1411	12.86	1448	13.90	1485	14.96	1520	16.03	1556	17.11	1595	18.26
12393	2500	1322	10.42	1360	11.45	1396	12.49	1435	13.54	1472	14.61	1508	15.69	1543	16.79	1577	17.91	1611	19.03
12889	2600	1350	11.04	1388	12.09	1423	13.16	1459	14.25	1496	15.34	1532	16.46	1566	17.58	1600	18.73	1633	19.88
13384	2700	1379	11.69	1416	12.77	1451	13.87	1485	14.98	1520	16.11	1555	17.25	1590	18.41	1623	19.58	1656	20.76
13880	2800	1408	12.37	1444	13.48	1479	14.60	1513	15.75	1546	16.91	1580	18.08	1614	19.26	1647	20.46	1679	21.67
14376	2900	1437	13.09	1473	14.22	1508	15.38	1541	16.55	1574	17.73	1605	18.94	1638	20.15	1671	21.38	1703	22.62
14872	3000	1466	13.84	1502	15.00	1536	16.18	1569	17.38	1602	18.60	1633	19.83	1663	21.07	1695	22.33	1727	23.60
15367	3100	1496	14.62	1531	15.82	1565	17.03	1598	18.25	1630	19.50	1661	20.75	1691	22.03	1720	23.32	1751	24.62
15863	3200	1528	15.48	1560	16.67	1594	17.91	1627	19.16	1658	20.43	1689	21.72	1719	23.02	1748	24.34	1776	25.67
16359	3300	1560	16.38	1590	17.56	1623	18.82	1656	20.11	1687	21.41	1717	22.72	1747	24.05	1776	25.40	1804	26.76
16854	3400	1592	17.33	1622	18.53	1653	19.78	1685	21.10	1716	22.42	1746	23.77	1775	25.13	1804	26.50	1831	27.89
17350	3500	1625	18.32	1655	19.55	1683	20.80	1714	22.12	1745	23.48	1774	24.85	1803	26.24	1832	27.64	1859	29.06
17846	3600	1658	19.35	1687	20.61	1715	21.89	1744	23.19	1774	24.58	1803	25.98	1832	27.39	1860	28.82	1888	30.27

		9.00" SP		10.00" SP		11.00" SP		12.00" SP		13.00" SP		14.00" SP		15.00" SP		16.00" SP		17.00" SP	
CFM	OV	RPM	BHP	RPM	BHP	RPM	BHP	RPM	BHP	RPM	BHP	RPM	BHP	RPM	BHP	RPM	BHP	RPM	BHP
12393	2500	1686	21.43	1764	23.96	1846	26.61	1924	29.34	1999	32.15								
12889	2600	1699	22.24	1774	24.80	1849	27.45	1927	30.21	2003	33.06	2075	35.98	2145	38.95				
13384	2700	1719	23.17	1785	25.68	1858	28.36	1930	31.13	2006	34.01	2078	36.97	2148	40.00	2215	43.07		
13880	2800	1741	24.14	1802	26.65	1868	29.30	1938	32.11	2009	35.00	2082	37.98	2151	41.06	2219	44.19	2284	47.37
14376	2900	1765	25.14	1824	27.71	1883	30.32	1948	33.13	2016	36.05	2084	39.05	2155	42.15	2222	45.32	2288	48.57
14872	3000	1788	26.18	1847	28.81	1904	31.48	1962	34.22	2026	37.15	2091	40.18	2158	43.29	2225	46.49	2291	49.77
15367	3100	1812	27.25	1870	29.94	1926	32.67	1981	35.44	2039	38.32	2101	41.36	2164	44.49	2228	47.71	2294	51.01
15863	3200	1836	28.37	1894	31.11	1950	33.89	2003	36.73	2056	39.60	2113	42.60	2174	45.76	2235	48.99	2297	52.31
16359	3300	1860	29.52	1918	32.31	1973	35.16	2026	38.05	2078	40.99	2130	43.95	2186	47.08	2245	50.35	2304	53.68
16854	3400	1885	30.70	1942	33.56	1997	36.46	2050	39.41	2101	42.40	2151	45.43	2201	48.49	2256	51.74	2314	55.12
17350	3500	1913	31.93	1966	34.85	2021	37.81	2073	40.81	2124	43.86	2174	46.95	2222	50.08	2271	53.23	2325	56.59
17846	3600	1941	33.19	1992	36.18	2045	39.20	2097	42.26	2148	45.36	2197	48.51	2245	51.69	2292	54.91	2339	58.17
18342	3700	1969	34.51	2019	37.54	2069	40.63	2121	43.75	2172	46.91	2220	50.11	2268	53.35	2314	56.63	2360	59.95
18837	3800	1997	35.86	2047	38.95	2096	42.10	2145	45.28	2195	48.50	2244	51.76	2291	55.06	2337	58.39	2382	61.77
19333	3900	2025	37.26	2075	40.41	2123	43.61	2170	46.86	2219	50.13	2268	53.45	2315	56.80	2361	60.20	2405	63.63

Performance shown is for installation type B & D - Free or ducted inlet, Ducted outlet. Underlined ratings indicate maximum static efficiency. Power rating (BHP) does not include drive losses. Performance ratings do not include the effects of appurtenances in the airstream. NOTE: Ratings shown apply also to model QBCA.

CLASS 1 | CLASS 2 | CLASS 3

BCA-300 SINGLE WIDTH

CONSTANT SPEED PERFORMANCE CURVES

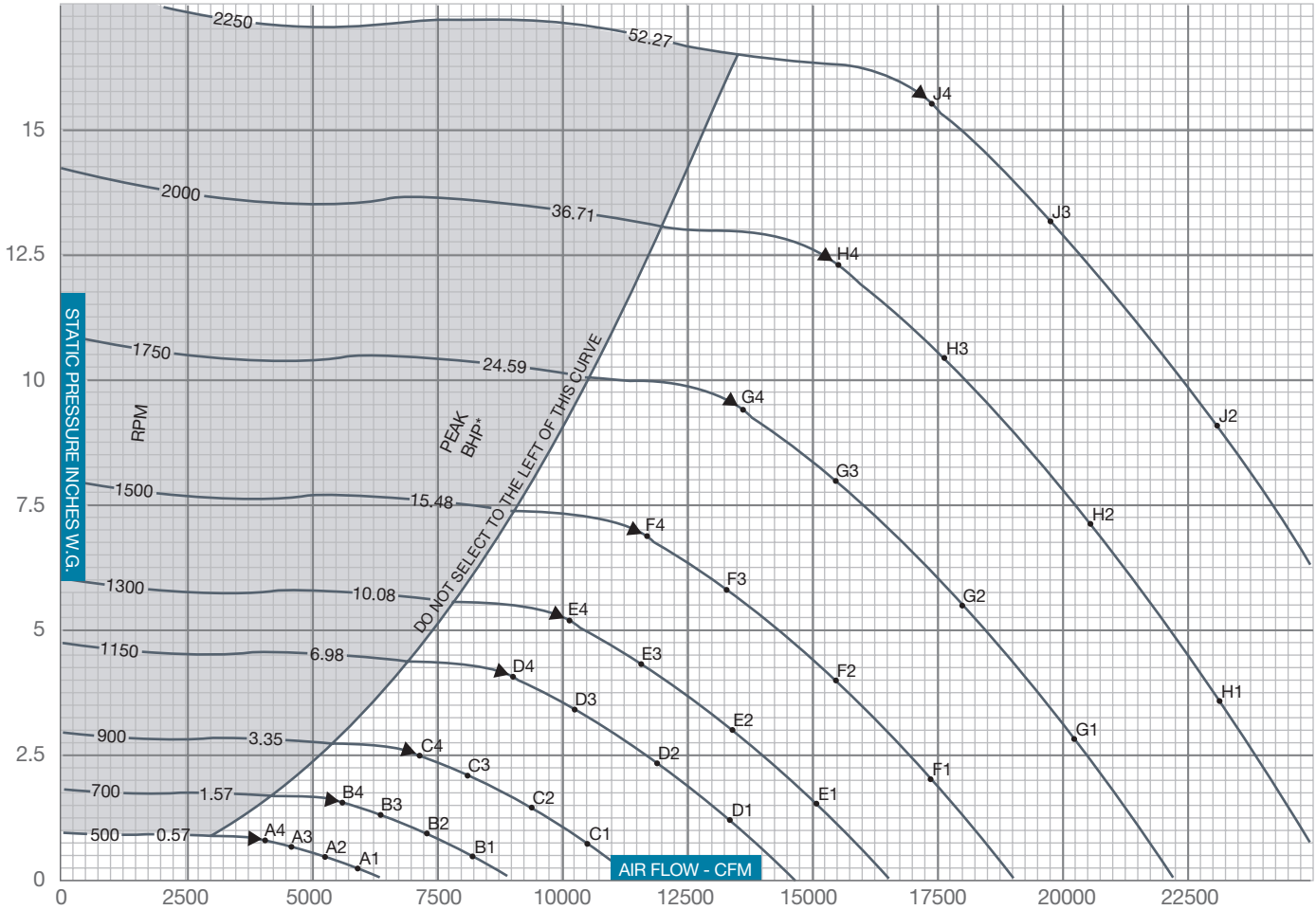

▲ PEAK STATIC EFFICIENCY
* Peak BHP does not include drive losses

$$\% \text{ STATIC EFFICIENCY} = \frac{\text{CFM x SP x .0157}}{\text{BHP}}$$

$$\text{Outlet Velocity (OV) in feet per minute} = \frac{\text{CFM}}{\text{Outlet Area}}$$

SOUND POWER LEVELS x 10^{-12} WATT

The sound power level ratings shown are in decibels, referred to 10^{-12} watts calculated per AMCA Standard 301. Values shown are for inlet L_{wi} sound power levels for installation Type B, free inlet, ducted outlet. Ratings do not include the effects of duct end correction.

FAN RPM	FAN SP	SOUND POINT	BAND / FREQUENCY 1 / 63	2 / 125	3 / 250	4 / 500	5 / 1000	6 / 2000	7 / 4000	8 / 8000
500	0.25	A1	67	64	63	61	57	53	50	47
	0.45	A2	66	62	60	58	54	51	48	44
	0.65	A3	62	60	59	57	54	51	47	43
	0.77	A4	62	59	59	58	54	50	46	41
700	0.44	B1	71	77	71	70	66	62	59	55
	0.88	B2	70	76	68	67	63	60	57	53
	1.28	B3	67	72	67	66	63	60	56	52
	1.50	B4	68	72	66	66	64	59	55	51
900	0.73	C1	74	84	77	76	73	69	65	62
	1.45	C2	73	84	75	73	70	67	63	60
	2.12	C3	72	79	73	72	70	66	63	59
	2.49	C4	72	79	72	72	70	66	62	58
1150	1.19	D1	85	87	86	82	80	76	72	69
	2.38	D2	85	86	84	79	77	73	70	66
	3.45	D3	84	83	81	78	76	73	69	66
	4.06	D4	83	83	81	77	76	73	69	65
1300	1.52	E1	90	88	91	85	83	79	75	72
	3.04	E2	91	87	89	82	80	76	73	70
	4.41	E3	90	85	86	80	79	76	73	69
	5.19	E4	88	85	86	80	79	77	72	68

FAN RPM	FAN SP	SOUND POINT	BAND / FREQUENCY 1 / 63	2 / 125	3 / 250	4 / 500	5 / 1000	6 / 2000	7 / 4000	8 / 8000
1500	2.02	F1	97	90	96	88	87	83	79	76
	4.04	F2	97	89	95	85	83	80	77	73
	5.88	F3	96	87	91	84	83	80	77	73
	6.91	F4	95	87	91	83	83	81	76	72
1750	2.75	G1	104	91	101	91	91	88	83	80
	5.50	G2	105	91	100	89	87	85	81	78
	8.00	G3	104	89	95	87	87	84	81	77
	9.40	G4	102	90	96	87	86	85	81	76
2000	3.59	H1	106	97	102	96	94	91	87	83
	7.18	H2	107	97	102	94	91	88	84	81
	10.45	H3	106	96	97	92	90	88	84	81
	12.28	H4	104	96	98	92	89	88	84	80
2250	4.55	J1	108	103	103	101	96	94	90	86
	9.09	J2	109	102	103	99	93	91	88	84
	13.22	J3	108	101	99	96	92	91	87	84
	15.54	J4	106	101	100	96	92	91	88	83

BCA-330 SINGLE WIDTH

WHEEL DIAMETER: 33.00"
WHEEL CIRCUMFERENCE: 8.64'
OUTLET AREA: 6.009 SQ. FT.
OUTLET SIZE: 26 3/16" X 33 1/16"
INLET DIAMETER: 34 1/2" O.D.

MAX SPEEDS	CLASS 1	CLASS 2	CLASS 3
Up to 250°F	1299	1695	2256
251°F to 400°F*	1234	1610	2143
401°F to 700°F*	1065	1390	1850
Above 700°F	CONTACT FACTORY		

*Special hi-temp construction required
Tip Speed (fpm) = 8.64 x RPM
Max BHP = 7.391 x $(RPM/1000)^3$

		0.25" SP		0.50" SP		0.75" SP		1.00" SP		1.50" SP		2.00" SP		2.50" SP		3.00" SP		3.50" SP	
CFM	OV	RPM	BHP	RPM	BHP	RPM	BHP	RPM	BHP	RPM	BHP	RPM	BHP	RPM	BHP	RPM	BHP	RPM	BHP
4198	700	320	0.23	382	0.41	441	0.61	504	0.84										
4798	800	347	0.29	404	0.49	455	0.69	508	0.93										
5398	900	377	0.37	429	0.57	477	0.80	521	1.04	619	1.59								
5998	1000	407	0.45	455	0.67	499	0.92	542	1.17	624	1.73	713	2.38						
6598	1100	438	0.56	482	0.79	525	1.05	564	1.32	638	1.90	716	2.56	797	3.29				
7198	1200	470	0.66	511	0.92	551	1.20	588	1.49	658	2.10	725	2.76	800	3.51	873	4.31		
7797	1300	503	0.79	541	1.08	577	1.36	614	1.67	680	2.32	742	3.01	806	3.75	876	4.57	943	5.44
8397	1400	535	0.93	571	1.25	606	1.55	640	1.87	703	2.56	763	3.28	819	4.03	881	4.86	946	5.75
8997	1500	568	1.10	602	1.45	635	1.76	666	2.09	728	2.81	785	3.57	839	4.36	892	5.18	951	6.08
9597	1600	602	1.28	633	1.66	665	2.00	694	2.34	754	3.09	807	3.88	861	4.70	910	5.56	961	6.44
10197	1700	635	1.48	666	1.89	695	2.26	724	2.62	780	3.39	832	4.22	883	5.08	932	5.96	978	6.87
10797	1800	669	1.71	698	2.13	726	2.55	754	2.93	806	3.72	858	4.58	905	5.47	953	6.39	999	7.34
11396	1900	703	1.96	731	2.41	757	2.87	784	3.26	833	4.07	884	4.96	931	5.89	975	6.85	1020	7.83
11996	2000	737	2.24	764	2.70	789	3.19	814	3.62	862	4.47	910	5.38	956	6.34	999	7.33	1042	8.35
12596	2100	771	2.54	797	3.03	821	3.53	845	4.02	892	4.89	937	5.82	982	6.82	1024	7.84	1064	8.90

		4.00" SP		4.50" SP		5.00" SP		5.50" SP		6.00" SP		6.50" SP		7.00" SP		7.50" SP		8.00" SP	
CFM	OV	RPM	BHP	RPM	BHP	RPM	BHP	RPM	BHP	RPM	BHP	RPM	BHP	RPM	BHP	RPM	BHP	RPM	BHP
10197	1700	1026	7.83	1078	8.86	1132	9.93	1184	11.05	1235	12.21								
10797	1800	1042	8.31	1087	9.32	1137	10.41	1187	11.55	1238	12.72	1286	13.93	1333	15.16				
11396	1900	1062	8.83	1103	9.86	1146	10.93	1193	12.08	1241	13.27	1289	14.49	1336	15.76	1380	17.05	1424	18.36
11996	2000	1084	9.39	1124	10.45	1162	11.53	1203	12.66	1248	13.86	1292	15.09	1339	16.38	1384	17.69	1427	19.04
12596	2100	1105	9.97	1145	11.06	1183	12.18	1220	13.32	1258	14.50	1301	15.75	1342	17.04	1386	18.37	1430	19.73
13196	2200	1127	10.58	1166	11.71	1204	12.86	1240	14.03	1275	15.22	1312	16.45	1351	17.75	1392	19.09	1433	20.47
13796	2300	1151	11.23	1188	12.39	1225	13.58	1261	14.78	1295	16.01	1329	17.25	1363	18.52	1401	19.87	1440	21.26
14396	2400	1176	11.90	1211	13.10	1247	14.33	1283	15.57	1317	16.83	1350	18.10	1382	19.40	1414	20.71	1450	22.10
14995	2500	1202	12.61	1236	13.85	1269	15.11	1304	16.38	1338	17.68	1371	18.99	1403	20.32	1433	21.67	1465	23.03
15595	2600	1228	13.36	1261	14.63	1294	15.92	1326	17.24	1360	18.57	1392	19.91	1424	21.28	1454	22.66	1484	24.06
16195	2700	1253	14.15	1287	15.45	1319	16.78	1350	18.13	1382	19.49	1414	20.87	1445	22.27	1476	23.69	1505	25.12
16795	2800	1280	14.97	1313	16.31	1345	17.67	1376	19.05	1405	20.46	1436	21.88	1467	23.31	1497	24.76	1527	26.22
17395	2900	1306	15.84	1339	17.21	1371	18.60	1401	20.02	1431	21.46	1459	22.91	1489	24.38	1519	25.87	1548	27.37
17995	3000	1333	16.74	1365	18.15	1397	19.58	1427	21.03	1456	22.50	1484	23.99	1512	25.50	1541	27.02	1570	28.56
18595	3100	1360	17.69	1392	19.14	1423	20.60	1453	22.09	1482	23.59	1510	25.11	1537	26.66	1564	28.22	1592	29.79
19194	3200	1389	18.73	1419	20.17	1449	21.67	1479	23.19	1507	24.72	1535	26.28	1562	27.86	1589	29.45	1615	31.06
19794	3300	1418	19.83	1446	21.25	1476	22.78	1505	24.33	1533	25.90	1561	27.50	1588	29.11	1614	30.73	1640	32.38
20394	3400	1448	20.97	1475	22.43	1503	23.94	1532	25.53	1560	27.13	1587	28.76	1614	30.40	1640	32.06	1665	33.74
20994	3500	1477	22.16	1504	23.65	1530	25.16	1558	26.77	1586	28.41	1613	30.07	1640	31.75	1665	33.44	1690	35.16
21594	3600	1507	23.41	1534	24.94	1559	26.48	1585	28.06	1613	29.74	1639	31.43	1666	33.15	1691	34.88	1716	36.62

		9.00" SP		10.00" SP		11.00" SP		12.00" SP		13.00" SP		14.00" SP		15.00" SP		16.00" SP		17.00" SP	
CFM	OV	RPM	BHP	RPM	BHP	RPM	BHP	RPM	BHP	RPM	BHP	RPM	BHP	RPM	BHP	RPM	BHP	RPM	BHP
14995	2500	1533	25.93	1604	28.99	1678	32.19	1749	35.50	1817	38.90								
15595	2600	1545	26.92	1613	30.01	1681	33.21	1752	36.56	1821	40.01	1886	43.54	1950	47.13				
16195	2700	1563	28.03	1623	31.07	1689	34.32	1755	37.67	1824	41.15	1889	44.73	1953	48.40	2014	52.12		
16795	2800	1583	29.21	1638	32.24	1698	35.46	1762	38.85	1826	42.35	1892	45.96	1956	49.68	2017	53.47	2076	57.32
17395	2900	1604	30.42	1658	33.53	1711	36.69	1771	40.09	1833	43.62	1895	47.25	1959	51.00	2020	54.84	2080	58.77
17995	3000	1626	31.68	1679	34.86	1730	38.09	1784	41.41	1842	44.96	1901	48.62	1961	52.38	2023	56.25	2083	60.22
18595	3100	1647	32.98	1700	36.22	1751	39.53	1801	42.89	1853	46.36	1910	50.05	1967	53.84	2026	57.73	2086	61.73
19194	3200	1669	34.32	1722	37.64	1772	41.01	1821	44.44	1870	47.91	1921	51.55	1977	55.37	2032	59.28	2088	63.30
19794	3300	1691	35.71	1743	39.10	1794	42.54	1842	46.04	1889	49.59	1936	53.18	1987	56.96	2041	60.92	2094	64.95
20394	3400	1714	37.15	1765	40.61	1815	44.12	1863	47.69	1910	51.31	1955	54.98	2001	58.68	2051	62.61	2104	66.69
20994	3500	1739	38.63	1787	42.17	1837	45.75	1885	49.38	1931	53.07	1976	56.81	2020	60.59	2065	64.41	2114	68.48
21594	3600	1764	40.17	1811	43.77	1859	47.43	1906	51.13	1953	54.89	1997	58.69	2041	62.55	2084	66.45	2127	70.38
22194	3700	1790	41.75	1836	45.43	1881	49.16	1928	52.93	1974	56.76	2019	60.63	2062	64.56	2104	68.53	2146	72.54
22793	3800	1815	43.39	1861	47.13	1905	50.94	1950	54.79	1996	58.68	2040	62.62	2083	66.62	2125	70.66	2165	74.74
23393	3900	1841	45.09	1887	48.90	1930	52.77	1973	56.70	2018	60.66	2062	64.67	2105	68.73	2146	72.84	2187	77.00

Performance shown is for installation type B & D - Free or ducted inlet, Ducted outlet. Underlined ratings indicate maximum static efficiency. Power rating (BHP) does not include drive losses. Performance ratings do not include the effects of appurtenances in the airstream. NOTE: Ratings shown apply also to model QBCA.

CLASS 1 | CLASS 2 | CLASS 3

BCA-330 SINGLE WIDTH

CONSTANT SPEED PERFORMANCE CURVES

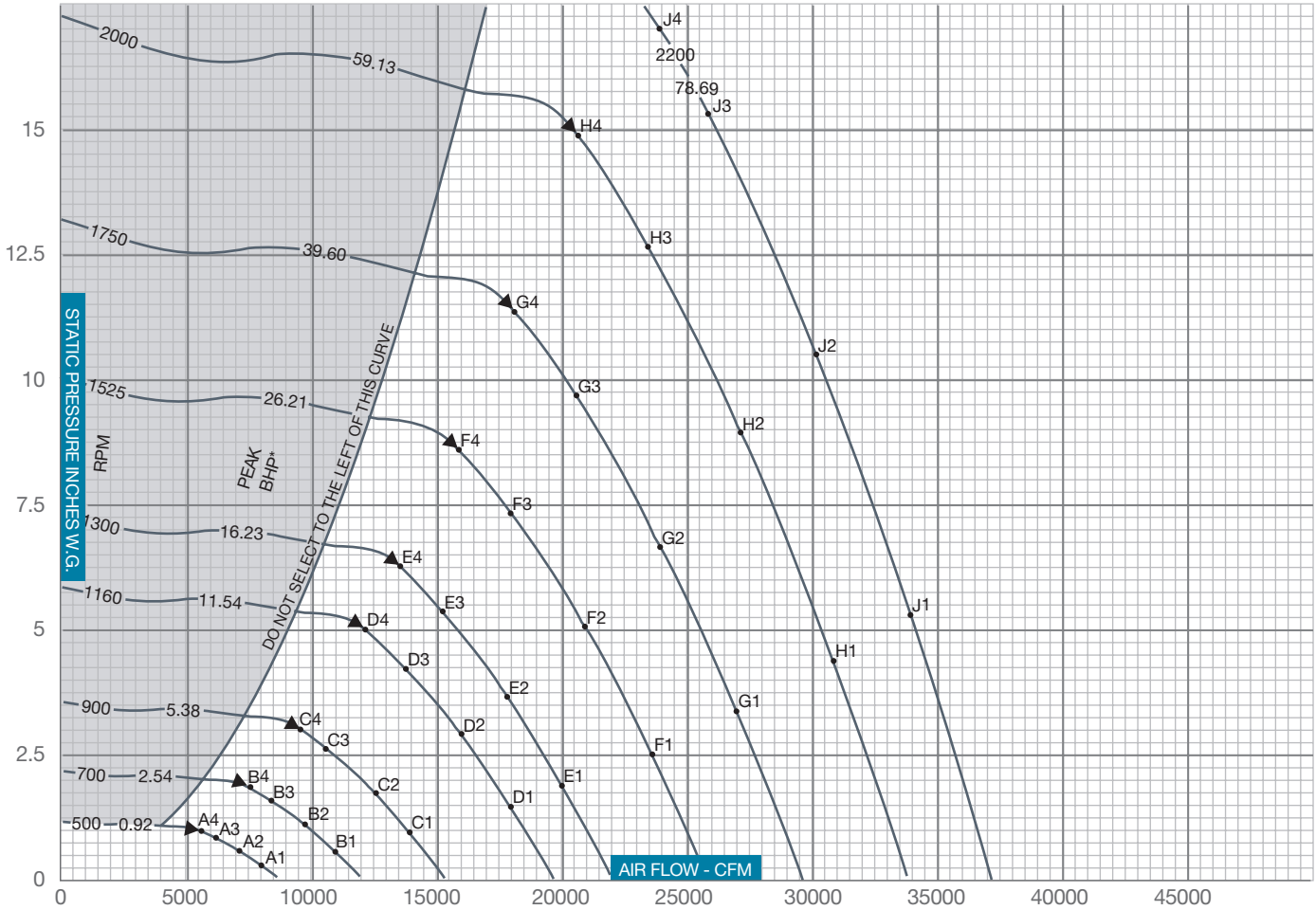

▲ PEAK STATIC EFFICIENCY
* Peak BHP does not include drive losses

$$\% \text{ STATIC EFFICIENCY} = \frac{\text{CFM x SP x .0157}}{\text{BHP}}$$

$$\text{Outlet Velocity (OV) in feet per minute} = \frac{\text{CFM}}{\text{Outlet Area}}$$

SOUND POWER LEVELS x 10^{-12} WATT

The sound power level ratings shown are in decibels, referred to 10^{-12} watts calculated per AMCA Standard 301. Values shown are for inlet L_{wi} sound power levels for installation Type B, free inlet, ducted outlet. Ratings do not include the effects of duct end correction.

FAN RPM	FAN SP	SOUND POINT	BAND / FREQUENCY 1 / 63	2 / 125	3 / 250	4 / 500	5 / 1000	6 / 2000	7 / 4000	8 / 8000
500	0.27	A1	70	67	66	64	60	56	53	49
	0.54	A2	70	65	63	61	57	54	51	47
	0.79	A3	66	63	62	60	57	53	50	46
	0.93	A4	66	63	62	61	57	53	48	44
700	0.53	B1	74	80	74	73	69	65	62	58
	1.06	B2	73	79	71	70	66	63	59	56
	1.55	B3	71	75	70	69	66	63	59	55
	1.82	B4	71	75	69	69	66	62	58	53
900	0.88	C1	77	87	80	79	76	72	68	65
	1.76	C2	77	87	78	76	73	69	66	63
	2.56	C3	75	82	76	75	73	69	66	62
	3.01	C4	76	83	75	75	73	69	65	61
1160	1.46	D1	89	90	89	85	83	79	75	72
	2.92	D2	89	90	88	82	80	76	73	70
	4.25	D3	88	86	85	81	79	76	72	69
	5.00	D4	87	87	85	81	79	76	72	68
1300	1.84	E1	94	91	94	88	86	82	78	75
	3.67	E2	94	91	92	85	83	79	76	73
	5.34	E3	93	88	89	83	82	79	76	72
	6.28	E4	92	88	89	83	82	79	75	71

FAN RPM	FAN SP	SOUND POINT	BAND / FREQUENCY 1 / 63	2 / 125	3 / 250	4 / 500	5 / 1000	6 / 2000	7 / 4000	8 / 8000
1525	2.53	F1	101	93	100	91	90	87	82	79
	5.05	F2	102	92	99	89	87	84	80	77
	7.35	F3	101	90	94	87	86	83	80	76
	8.64	F4	99	91	95	87	86	84	80	75
1750	3.33	G1	107	95	104	94	93	91	86	83
	6.65	G2	108	94	103	92	90	87	84	80
	9.68	G3	107	93	98	90	89	87	84	80
	11.37	G4	105	93	99	90	89	88	84	79
2000	4.35	H1	109	101	105	99	97	94	90	86
	8.69	H2	111	100	105	97	94	91	87	84
	12.64	H3	110	99	100	95	92	90	87	84
	14.86	H4	107	99	101	95	92	91	87	83
2200	5.26	J1	111	105	106	103	99	97	92	89
	10.52	J2	112	105	106	101	96	93	90	86
	15.30	J3	111	104	102	98	95	93	90	86
	17.00	J4	109	103	102	98	94	93	90	86

BCA-365 SINGLE WIDTH

WHEEL DIAMETER: 36.50"
WHEEL CIRCUMFERENCE: 9.56'
OUTLET AREA: 7.347 SQ. FT.
OUTLET SIZE: 29" X 36½"
INLET DIAMETER: 37½" O.D.

MAX SPEEDS	CLASS 1	CLASS 2	CLASS 3
Up to 250°F	1175	1532	2040
251°F to 400°F*	1116	1455	1938
401°F to 700°F*	964	1256	1673
Above 700°F	CONTACT FACTORY		

*Special hi-temp construction required
Tip Speed (fpm) = 9.56 x RPM
Max BHP = 12.235 x $(RPM/1000)^3$

		0.25" SP		0.50" SP		0.75" SP		1.00" SP		1.50" SP		2.00" SP		2.50" SP		3.00" SP		3.50" SP	
CFM	OV	RPM	BHP	RPM	BHP	RPM	BHP	RPM	BHP	RPM	BHP	RPM	BHP	RPM	BHP	RPM	BHP	RPM	BHP
5136	700	289	0.29	345	0.50	398	0.74	456	1.02										
5870	800	314	0.36	365	0.59	412	0.85	459	1.13										
6604	900	341	0.45	388	0.70	431	0.98	471	1.27	560	1.94								
7338	1000	368	0.55	411	0.82	452	1.12	490	1.44	564	2.12	645	2.91						
8072	1100	396	0.68	436	0.96	475	1.28	510	1.62	576	2.33	648	3.13	721	4.02				
8805	1200	425	0.81	462	1.13	498	1.46	532	1.82	595	2.57	655	3.38	723	4.29	789	5.27		
9539	1300	454	0.97	489	1.32	522	1.67	555	2.04	615	2.84	671	3.68	729	4.59	792	5.59	853	6.66
10273	1400	484	1.14	517	1.53	548	1.90	579	2.29	635	3.13	690	4.01	741	4.93	797	5.94	855	7.03
11007	1500	514	1.34	544	1.77	574	2.16	603	2.56	658	3.44	710	4.37	759	5.33	806	6.33	859	7.43
11741	1600	544	1.56	573	2.03	601	2.45	628	2.86	681	3.78	730	4.75	778	5.76	823	6.80	868	7.88
12475	1700	574	1.81	602	2.31	629	2.77	654	3.21	705	4.15	753	5.16	798	6.21	842	7.29	884	8.41
13208	1800	605	2.09	631	2.61	656	3.12	681	3.58	729	4.55	776	5.60	819	6.69	862	7.82	903	8.98
13942	1900	636	2.40	661	2.94	684	3.51	709	3.99	753	4.98	799	6.07	841	7.21	882	8.38	922	9.58
14676	2000	666	2.73	691	3.31	713	3.90	736	4.43	780	5.46	823	6.58	864	7.76	903	8.97	942	10.21
15410	2100	697	3.11	720	3.70	742	4.32	764	4.91	806	5.99	847	7.12	888	8.34	926	9.59	962	10.88

		4.00" SP		4.50" SP		5.00" SP		5.50" SP		6.00" SP		6.50" SP		7.00" SP		7.50" SP		8.00" SP	
CFM	OV	RPM	BHP	RPM	BHP	RPM	BHP	RPM	BHP	RPM	BHP	RPM	BHP	RPM	BHP	RPM	BHP	RPM	BHP
12475	1700	927	9.57	974	10.83	1023	12.15	1071	13.52	1116	14.93								
13208	1800	942	10.16	983	11.40	1028	12.74	1073	14.12	1119	15.56	1163	17.04	1205	18.55				
13942	1900	961	10.80	997	12.06	1037	13.38	1079	14.78	1122	16.23	1166	17.73	1208	19.28	1248	20.86	1287	22.47
14676	2000	980	11.48	1016	12.78	1051	14.10	1088	15.49	1128	16.96	1168	18.46	1210	20.04	1251	21.65	1290	23.30
15410	2100	999	12.20	1035	13.53	1069	14.90	1103	16.29	1138	17.73	1176	19.27	1214	20.84	1253	22.47	1293	24.14
16144	2200	1019	12.95	1055	14.33	1089	15.74	1121	17.17	1153	18.62	1186	20.12	1222	21.72	1258	23.36	1295	25.04
16877	2300	1041	13.73	1074	15.16	1108	16.61	1140	18.09	1171	19.58	1202	21.10	1233	22.65	1267	24.30	1302	26.01
17611	2400	1063	14.56	1095	16.03	1128	17.53	1160	19.04	1190	20.58	1220	22.15	1249	23.73	1279	25.33	1311	27.03
18345	2500	1087	15.43	1118	16.94	1147	18.48	1179	20.04	1210	21.63	1239	23.23	1268	24.86	1296	26.51	1324	28.17
19079	2600	1110	16.34	1140	17.90	1170	19.48	1199	21.09	1229	22.71	1259	24.36	1287	26.03	1315	27.72	1342	29.43
19813	2700	1133	17.30	1164	18.90	1193	20.52	1221	22.17	1249	23.85	1278	25.54	1307	27.25	1334	28.98	1361	30.73
20547	2800	1157	18.31	1187	19.95	1216	21.62	1244	23.31	1271	25.02	1298	26.76	1326	28.51	1354	30.29	1380	32.08
21280	2900	1181	19.37	1211	21.05	1239	22.76	1267	24.49	1293	26.25	1319	28.03	1346	29.83	1373	31.65	1400	33.48
22014	3000	1205	20.48	1234	22.21	1263	23.96	1290	25.73	1316	27.53	1342	29.35	1367	31.20	1393	33.06	1419	34.94
22748	3100	1229	21.65	1258	23.41	1286	25.20	1313	27.02	1340	28.86	1365	30.72	1390	32.61	1414	34.52	1439	36.44
23482	3200	1256	22.92	1283	24.67	1310	26.51	1337	28.36	1363	30.25	1388	32.15	1413	34.08	1436	36.03	1460	38.00
24216	3300	1282	24.25	1307	26.00	1334	27.87	1361	29.77	1386	31.69	1411	33.64	1436	35.61	1459	37.60	1482	39.61
24950	3400	1309	25.65	1333	27.44	1358	29.28	1385	31.23	1410	33.19	1435	35.18	1459	37.19	1482	39.23	1505	41.28
25683	3500	1336	27.11	1360	28.94	1383	30.79	1409	32.75	1434	34.76	1458	36.79	1482	38.84	1506	40.91	1528	43.01
26417	3600	1363	28.64	1387	30.51	1410	32.40	1433	34.33	1458	36.38	1482	38.46	1506	40.55	1529	42.67	1552	44.80

		9.00" SP		10.00" SP		11.00" SP		12.00" SP		13.00" SP		14.00" SP		15.00" SP		16.00" SP		17.00" SP	
CFM	OV	RPM	BHP	RPM	BHP	RPM	BHP	RPM	BHP	RPM	BHP	RPM	BHP	RPM	BHP	RPM	BHP	RPM	BHP
18345	2500	1386	31.73	1450	35.46	1517	39.38	1581	43.43	1643	47.59								
19079	2600	1397	32.93	1458	36.71	1519	40.63	1584	44.72	1646	48.94	1705	53.27	1763	57.65				
19813	2700	1413	34.29	1467	38.01	1527	41.98	1587	46.08	1649	50.34	1708	54.73	1765	59.21	1821	63.76		
20547	2800	1431	35.73	1481	39.44	1535	43.38	1593	47.53	1651	51.81	1711	56.23	1768	60.78	1824	65.42	1877	70.12
21280	2900	1450	37.21	1499	41.02	1547	44.88	1601	49.05	1657	53.37	1713	57.81	1771	62.39	1826	67.09	1880	71.89
22014	3000	1470	38.75	1518	42.64	1565	46.60	1613	50.66	1665	55.00	1719	59.47	1773	64.08	1829	68.82	1883	73.67
22748	3100	1489	40.34	1537	44.32	1583	48.36	1628	52.46	1676	56.72	1727	61.23	1779	65.86	1832	70.62	1886	75.52
23482	3200	1509	41.99	1557	46.05	1602	50.17	1646	54.37	1690	58.62	1737	63.06	1787	67.74	1837	72.52	1888	77.43
24216	3300	1529	43.69	1576	47.83	1622	52.05	1665	56.32	1708	60.67	1750	65.06	1796	69.69	1845	74.53	1894	79.46
24950	3400	1550	45.45	1596	49.68	1641	53.98	1685	58.34	1727	62.77	1768	67.26	1809	71.78	1854	76.59	1902	81.59
25683	3500	1572	47.26	1616	51.59	1661	55.97	1704	60.41	1746	64.93	1787	69.50	1826	74.13	1867	78.80	1911	83.78
26417	3600	1595	49.14	1637	53.55	1680	58.02	1724	62.55	1765	67.15	1806	71.80	1845	76.52	1884	81.29	1923	86.10
27151	3700	1618	51.08	1660	55.57	1700	60.14	1743	64.76	1785	69.44	1825	74.18	1864	78.98	1902	83.84	1940	88.74
27885	3800	1641	53.08	1683	57.66	1723	62.31	1763	67.03	1804	71.79	1844	76.61	1883	81.50	1921	86.44	1958	91.44
28619	3900	1665	55.16	1706	59.82	1745	64.55	1784	69.36	1824	74.21	1864	79.12	1903	84.09	1940	89.11	1977	94.19

Performance shown is for installation type B & D - Free or ducted inlet, Ducted outlet. Underlined ratings indicate maximum static efficiency. Power rating (BHP) does not include drive losses. Performance ratings do not include the effects of appurtenances in the airstream. NOTE: Ratings shown apply also to model QBCA.

CLASS 1 | CLASS 2 | CLASS 3

BCA-365 SINGLE WIDTH

CONSTANT SPEED PERFORMANCE CURVES

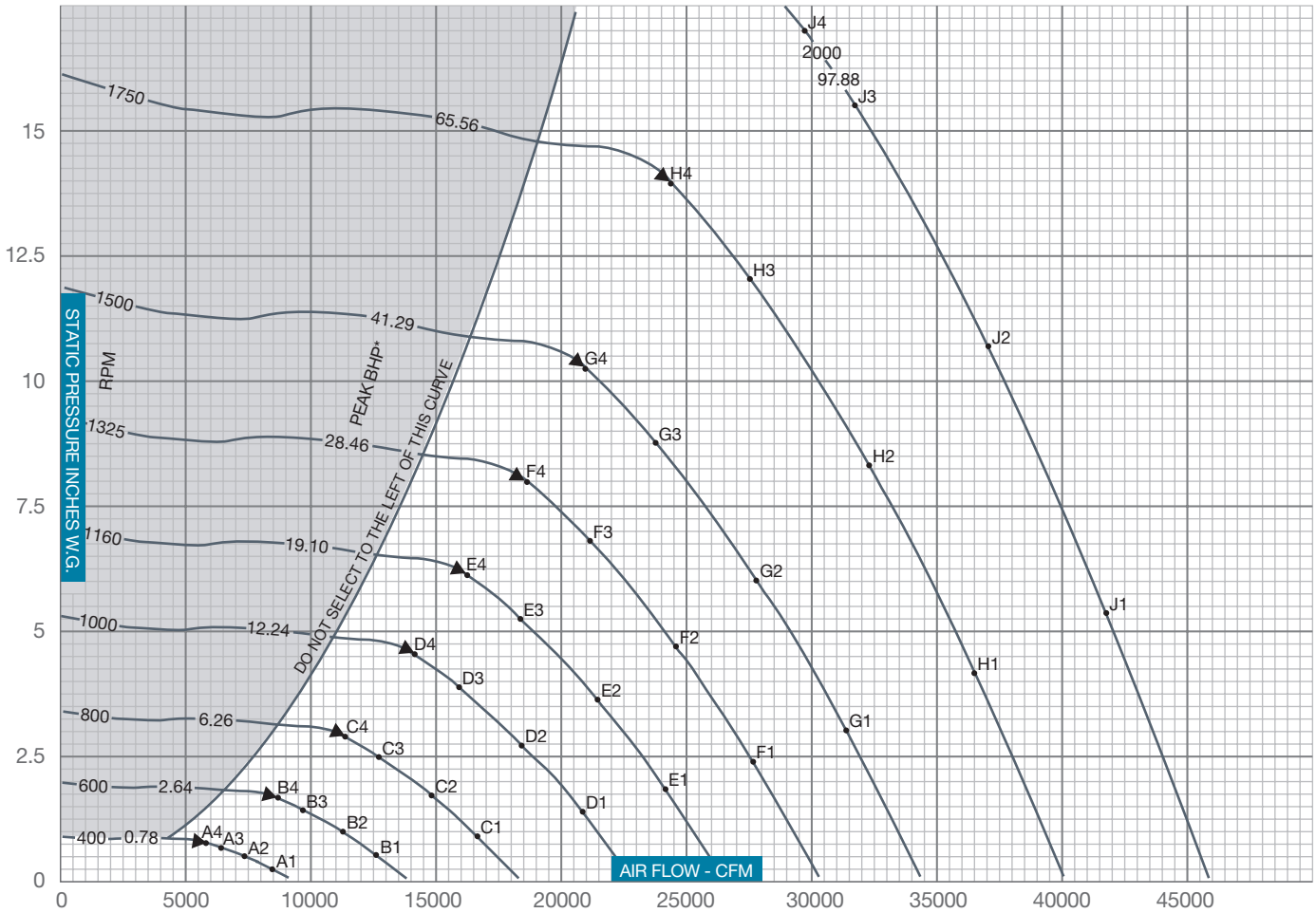

▲ PEAK STATIC EFFICIENCY
* Peak BHP does not include drive losses

$$\% \text{ STATIC EFFICIENCY} = \frac{\text{CFM x SP x .0157}}{\text{BHP}}$$

$$\text{Outlet Velocity (OV) in feet per minute} = \frac{\text{CFM}}{\text{Outlet Area}}$$

SOUND POWER LEVELS x 10^{-12} WATT

The sound power level ratings shown are in decibels, referred to 10^{-12} watts calculated per AMCA Standard 301. Values shown are for inlet L_{wi} sound power levels for installation Type B, free inlet, ducted outlet. Ratings do not include the effects of duct end correction.

FAN RPM	FAN SP	SOUND POINT	BAND / FREQUENCY 1 / 63	2 / 125	3 / 250	4 / 500	5 / 1000	6 / 2000	7 / 4000	8 / 8000
400	0.25	A1	70	63	63	60	56	53	50	46
	0.43	A2	69	61	61	58	54	51	48	44
	0.62	A3	65	59	60	58	54	50	47	43
	0.73	A4	65	59	60	58	54	50	45	41
600	0.48	B1	76	78	73	72	68	64	61	57
	0.96	B2	75	76	71	69	65	62	58	55
	1.39	B3	72	73	69	68	65	61	58	54
	1.64	B4	72	73	69	68	65	61	57	52
800	0.85	C1	79	88	80	79	76	72	68	65
	1.70	C2	78	88	77	76	73	69	66	63
	2.47	C3	77	83	76	75	73	69	65	62
	2.91	C4	77	83	75	75	73	69	65	60
1000	1.33	D1	86	92	87	85	82	78	74	71
	2.66	D2	85	91	85	82	79	75	72	69
	3.87	D3	84	87	83	81	78	75	72	68
	4.54	D4	84	88	82	80	79	75	71	67
1160	1.79	E1	92	94	93	88	86	82	78	75
	3.58	E2	92	93	91	85	83	79	76	73
	5.20	E3	91	90	88	84	82	79	76	72
	6.11	E4	90	90	88	84	82	79	75	71

FAN RPM	FAN SP	SOUND POINT	BAND / FREQUENCY 1 / 63	2 / 125	3 / 250	4 / 500	5 / 1000	6 / 2000	7 / 4000	8 / 8000
1325	2.33	F1	98	95	98	91	89	86	82	78
	4.67	F2	99	94	96	88	86	83	79	76
	6.79	F3	98	92	92	87	86	83	79	75
	7.98	F4	96	92	93	87	86	83	79	74
1500	2.99	G1	104	96	102	94	93	89	85	82
	5.98	G2	105	96	101	91	89	86	83	79
	8.70	G3	104	94	97	90	89	86	82	79
	10.22	G4	102	94	97	89	89	87	82	78
1760	4.12	H1	111	98	107	98	97	94	89	86
	8.23	H2	112	97	106	95	94	91	87	84
	11.98	H3	111	96	102	93	93	90	87	83
	14.07	H4	109	97	102	93	92	91	87	82
2000	5.32	J1	113	104	108	102	100	97	93	89
	10.63	J2	114	104	108	100	97	94	90	87
	15.47	J3	113	102	104	98	96	94	90	87
	17.00	J4	112	102	104	98	95	94	90	86

BCA-402 SINGLE WIDTH

WHEEL DIAMETER: 40.25"
WHEEL CIRCUMFERENCE: 10.54'
OUTLET AREA: 8.937 SQ. FT.
OUTLET SIZE: 31 15/16" X 40 5/16"
INLET DIAMETER: 41½" O.D.

MAX SPEEDS	CLASS 1	CLASS 2	CLASS 3
Up to 250°F	1065	1389	1850
251°F to 400°F*	1012	1320	1758
401°F to 700°F*	873	1139	1517
Above 700°F	CONTACT FACTORY		

*Special hi-temp construction required
Tip Speed (fpm) = 10.54 x RPM
Max BHP = 19.951 x $(RPM/1000)^3$

		0.25" SP		0.50" SP		0.75" SP		1.00" SP		1.50" SP		2.00" SP		2.50" SP		3.00" SP		3.50" SP	
CFM	OV	RPM	BHP	RPM	BHP	RPM	BHP	RPM	BHP	RPM	BHP	RPM	BHP	RPM	BHP	RPM	BHP	RPM	BHP
6246	700	262	0.35	313	0.61	361	0.90	413	1.24										
7138	800	285	0.44	331	0.72	373	1.03	416	1.38										
8031	900	309	0.54	352	0.85	391	1.19	427	1.54	507	2.36								
8923	1000	334	0.67	373	1.00	409	1.36	444	1.75	512	2.58	585	3.54						
9815	1100	359	0.83	395	1.17	430	1.56	462	1.97	523	2.83	587	3.81	654	4.89				
10708	1200	385	0.99	419	1.37	452	1.78	482	2.21	540	3.13	594	4.11	656	5.22	716	6.41		
11600	1300	412	1.18	444	1.60	473	2.02	503	2.48	557	3.45	608	4.47	661	5.58	718	6.80	773	8.10
12493	1400	439	1.39	468	1.87	497	2.31	525	2.78	576	3.80	626	4.88	672	6.00	722	7.23	776	8.55
13385	1500	466	1.63	494	2.16	521	2.62	546	3.11	597	4.18	644	5.31	688	6.48	731	7.70	779	9.04
14277	1600	493	1.90	519	2.47	545	2.98	569	3.48	618	4.60	662	5.78	706	7.00	746	8.26	788	9.59
15170	1700	521	2.20	546	2.81	570	3.37	593	3.90	639	5.05	683	6.27	724	7.55	764	8.87	802	10.22
16062	1800	549	2.54	572	3.17	595	3.80	618	4.35	661	5.53	703	6.81	742	8.14	782	9.51	819	10.91
16954	1900	576	2.91	599	3.58	620	4.26	643	4.85	683	6.05	725	7.39	763	8.76	799	10.19	836	11.65
17847	2000	604	3.33	626	4.02	647	4.74	667	5.39	707	6.64	746	8.00	784	9.43	819	10.91	854	12.42
18739	2100	632	3.78	653	4.50	673	5.25	693	5.97	731	7.28	768	8.66	805	10.14	840	11.67	872	13.23

		4.00" SP		4.50" SP		5.00" SP		5.50" SP		6.00" SP		6.50" SP		7.00" SP		7.50" SP		8.00" SP	
CFM	OV	RPM	BHP	RPM	BHP	RPM	BHP	RPM	BHP	RPM	BHP	RPM	BHP	RPM	BHP	RPM	BHP	RPM	BHP
15170	1700	841	11.64	884	13.17	928	14.78	971	16.44	1012	18.16								
16062	1800	854	12.36	891	13.87	932	15.49	973	17.18	1015	18.92	1054	20.73	1093	22.56				
16954	1900	871	13.14	905	14.66	940	16.26	978	17.97	1017	19.73	1057	21.56	1095	23.45	1132	25.37	1167	27.32
17847	2000	889	13.96	921	15.54	953	17.15	987	18.83	1023	20.62	1059	22.45	1097	24.37	1134	26.32	1170	28.33
18739	2100	906	14.83	939	16.46	970	18.12	1000	19.81	1032	21.57	1066	23.43	1101	25.34	1137	27.33	1172	29.35
19631	2200	924	15.74	956	17.42	987	19.14	1017	20.88	1045	22.65	1075	24.47	1108	26.41	1141	28.41	1175	30.45
20524	2300	944	16.70	974	18.44	1005	20.20	1034	21.99	1062	23.81	1090	25.66	1118	27.55	1149	29.55	1181	31.63
21416	2400	964	17.70	993	19.50	1023	21.31	1052	23.16	1080	25.03	1107	26.93	1133	28.86	1159	30.80	1189	32.87
22308	2500	985	18.76	1013	20.60	1041	22.48	1069	24.37	1097	26.30	1124	28.25	1150	30.23	1175	32.23	1201	34.25
23201	2600	1006	19.87	1034	21.77	1061	23.69	1087	25.64	1115	27.62	1142	29.62	1167	31.65	1192	33.71	1217	35.79
24093	2700	1028	21.04	1055	22.98	1082	24.96	1107	26.97	1133	29.00	1159	31.05	1185	33.13	1210	35.24	1234	37.37
24986	2800	1049	22.27	1076	24.26	1103	26.29	1128	28.34	1152	30.43	1177	32.54	1203	34.67	1228	36.83	1252	39.01
25878	2900	1071	23.56	1098	25.60	1124	27.68	1149	29.78	1173	31.92	1196	34.09	1221	36.28	1245	38.48	1269	40.72
26770	3000	1093	24.91	1119	27.00	1145	29.13	1170	31.29	1194	33.47	1217	35.69	1240	37.94	1263	40.20	1287	42.48
27663	3100	1115	26.32	1141	28.47	1166	30.65	1191	32.86	1215	35.09	1238	37.36	1260	39.65	1282	41.98	1305	44.32
28555	3200	1139	27.87	1163	30.00	1188	32.23	1212	34.49	1236	36.78	1259	39.10	1281	41.44	1303	43.81	1324	46.21
29447	3300	1163	29.49	1185	31.61	1210	33.89	1234	36.20	1257	38.54	1280	40.90	1302	43.30	1323	45.72	1344	48.17
30340	3400	1187	31.19	1209	33.36	1232	35.61	1256	37.97	1279	40.36	1301	42.78	1323	45.23	1344	47.70	1365	50.20
31232	3500	1211	32.97	1233	35.19	1255	37.44	1278	39.82	1300	42.27	1323	44.74	1344	47.23	1365	49.75	1386	52.30
32124	3600	1236	34.83	1257	37.10	1278	39.40	1300	41.75	1322	44.24	1344	46.76	1366	49.31	1387	51.88	1407	54.48

		9.00" SP		10.00" SP		11.00" SP		12.00" SP		13.00" SP		14.00" SP		15.00" SP		16.00" SP		17.00" SP	
CFM	OV	RPM	BHP	RPM	BHP	RPM	BHP	RPM	BHP	RPM	BHP	RPM	BHP	RPM	BHP	RPM	BHP	RPM	BHP
22308	2500	1257	38.58	1315	43.13	1376	47.89	1434	52.82	1490	57.87								
23201	2600	1267	40.04	1322	44.64	1378	49.40	1437	54.39	1493	59.52	1546	64.77	1598	70.11				
24093	2700	1281	41.70	1331	46.22	1385	51.05	1439	56.03	1495	61.21	1549	66.55	1601	72.00	1651	77.53		
24986	2800	1298	43.45	1343	47.97	1392	52.75	1445	57.80	1497	63.00	1551	68.38	1604	73.91	1654	79.55	1702	85.27
25878	2900	1315	45.25	1359	49.88	1403	54.58	1452	59.64	1503	64.89	1554	70.30	1606	75.87	1656	81.58	1705	87.42
26770	3000	1333	47.12	1377	51.85	1419	56.67	1462	61.60	1510	66.88	1559	72.32	1608	77.92	1659	83.68	1708	89.58
27663	3100	1351	49.06	1394	53.89	1436	58.81	1477	63.80	1520	68.97	1566	74.46	1613	80.09	1661	85.88	1710	91.83
28555	3200	1368	51.06	1412	55.99	1453	61.01	1493	66.12	1533	71.28	1575	76.69	1620	82.37	1666	88.19	1712	94.16
29447	3300	1386	53.13	1429	58.17	1471	63.29	1510	68.49	1549	73.78	1587	79.11	1629	84.74	1673	90.63	1717	96.62
30340	3400	1405	55.27	1447	60.41	1488	65.64	1528	70.94	1566	76.33	1603	81.78	1641	87.29	1682	93.14	1725	99.21
31232	3500	1426	57.47	1465	62.73	1506	68.06	1545	73.47	1583	78.95	1620	84.51	1656	90.14	1693	95.82	1733	101.87
32124	3600	1447	59.75	1485	65.12	1524	70.56	1563	76.07	1601	81.65	1637	87.32	1673	93.05	1708	98.85	1744	104.71
33017	3700	1467	62.11	1505	67.58	1542	73.13	1581	78.75	1619	84.44	1655	90.20	1690	96.04	1725	101.95	1759	107.91
33909	3800	1488	64.55	1526	70.12	1562	75.78	1599	81.51	1636	87.30	1673	93.16	1708	99.10	1742	105.11	1775	111.19
34801	3900	1510	67.08	1547	72.74	1583	78.50	1617	84.34	1654	90.24	1690	96.21	1725	102.25	1760	108.36	1793	114.54

Performance shown is for installation type B & D - Free or ducted inlet, Ducted outlet. Underlined ratings indicate maximum static efficiency. Power rating (BHP) does not include drive losses. Performance ratings do not include the effects of appurtenances in the airstream. NOTE: Ratings shown apply also to model QBCA.

CLASS 1 | CLASS 2 | CLASS 3

BCA-402 SINGLE WIDTH

CONSTANT SPEED PERFORMANCE CURVES

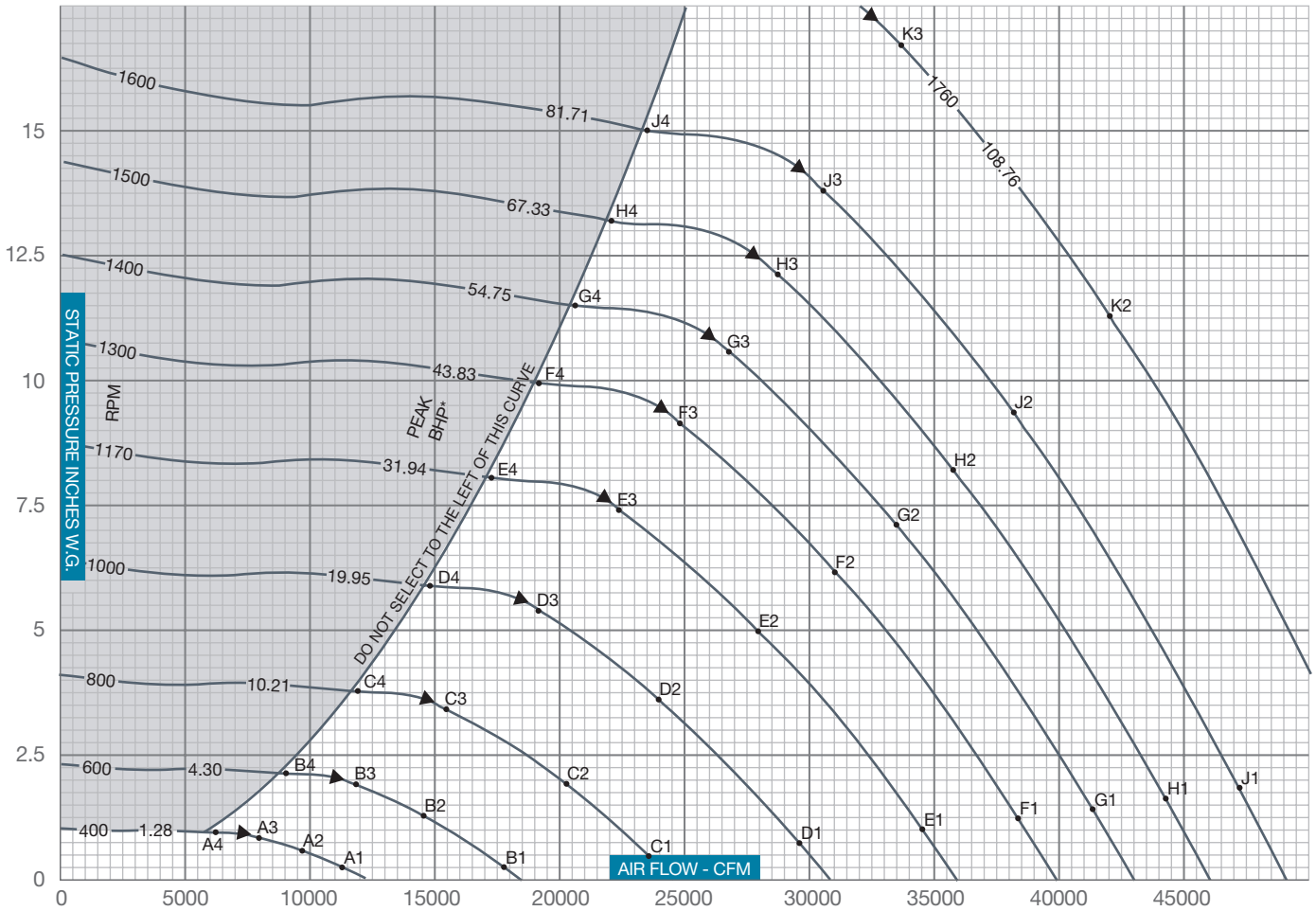

▲ PEAK STATIC EFFICIENCY
* Peak BHP does not include drive losses

$$\% \text{ STATIC EFFICIENCY} = \frac{\text{CFM x SP x .0157}}{\text{BHP}}$$

$$\text{Outlet Velocity (OV) in feet per minute} = \frac{\text{CFM}}{\text{Outlet Area}}$$

SOUND POWER LEVELS x 10^{-12} WATT

The sound power level ratings shown are in decibels, referred to 10^{-12} watts calculated per AMCA Standard 301. Values shown are for inlet L_{wi} sound power levels for installation Type B, free inlet, ducted outlet. Ratings do not include the effects of duct end correction.

FAN RPM	FAN SP	SOUND POINT	BAND / FREQUENCY 1 / 63	2 / 125	3 / 250	4 / 500	5 / 1000	6 / 2000	7 / 4000	8 / 8000
400	0.25	A1	80	72	74	73	64	58	53	48
	0.58	A2	79	69	68	67	60	55	50	45
	0.86	A3	76	69	64	64	58	54	48	43
	0.98	A4	74	69	63	63	57	53	47	42
600	0.26	B1	89	88	83	84	80	72	66	61
	1.31	B2	89	85	78	76	73	67	61	56
	1.94	B3	88	83	76	73	70	65	60	55
	2.21	B4	88	83	76	72	69	64	59	54
800	0.47	C1	94	99	89	91	90	81	74	69
	2.33	C2	95	97	85	83	82	75	70	65
	3.45	C3	96	94	85	79	79	74	69	63
	3.92	C4	97	92	85	79	78	72	68	62
1000	0.73	D1	98	104	97	95	95	89	81	76
	3.65	D2	99	102	94	89	87	82	76	71
	5.40	D3	100	100	93	86	84	80	75	70
	6.13	D4	101	99	93	85	83	79	74	69
1170	1.00	E1	101	107	103	98	99	94	86	80
	4.99	E2	102	106	100	93	91	87	81	76
	7.39	E3	103	105	98	91	87	85	80	75
	8.39	E4	104	105	98	90	87	84	78	74

FAN RPM	FAN SP	SOUND POINT	BAND / FREQUENCY 1 / 63	2 / 125	3 / 250	4 / 500	5 / 1000	6 / 2000	7 / 4000	8 / 8000
1300	1.23	F1	103	109	107	100	101	98	90	83
	6.16	F2	104	108	104	95	93	90	84	79
	9.12	F3	105	108	102	94	90	88	83	78
	10.35	F4	106	108	101	94	89	87	81	77
1400	1.43	G1	104	110	110	102	103	100	92	86
	7.15	G2	105	110	107	97	95	93	86	81
	10.58	G3	106	110	105	96	91	90	85	80
	12.01	G4	107	111	104	96	91	89	84	79
1500	1.64	H1	105	111	113	103	105	103	94	88
	8.20	H2	106	112	110	99	96	95	89	83
	12.14	H3	107	112	108	98	93	92	87	82
	13.78	H4	108	113	106	98	92	91	86	81
1600	1.87	J1	106	112	115	104	106	105	97	89
	9.34	J2	107	113	113	101	98	97	90	85
	13.82	J3	108	114	110	100	94	94	89	84
	15.68	J4	110	115	108	100	94	93	87	83
1760	2.26	K1	108	114	118	107	108	107	100	92
	11.30	K2	109	115	115	104	100	99	93	88
	16.72	K3	110	116	113	103	97	96	91	87

BCA-445 SINGLE WIDTH

WHEEL DIAMETER: 44.50"
WHEEL CIRCUMFERENCE: 11.65'
OUTLET AREA: 10.923 SQ. FT.
OUTLET SIZE: 35 5/16" X 44 9/16"
INLET DIAMETER: 45 1/2" O.D.

MAX SPEEDS	CLASS 1	CLASS 2	CLASS 3
Up to 250°F	963	1257	1673
251°F to 400°F*	915	1194	1589
401°F to 700°F*	790	1031	1372
Above 700°F	CONTACT FACTORY		

*Special hi-temp construction required
Tip Speed (fpm) = 11.65 x RPM
Max BHP = 32.957 x $(RPM/1000)^3$

		0.25" SP		0.50" SP		0.75" SP		1.00" SP		1.50" SP		2.00" SP		2.50" SP		3.00" SP		3.50" SP	
CFM	OV	RPM	BHP	RPM	BHP	RPM	BHP	RPM	BHP	RPM	BHP	RPM	BHP	RPM	BHP	RPM	BHP	RPM	BHP
7635	700	237	0.43	283	0.75	327	1.10	374	1.52										
8726	800	257	0.53	299	0.88	338	1.26	377	1.68										
9816	900	279	0.67	318	1.04	353	1.45	386	1.89	459	2.89								
10907	1000	302	0.82	337	1.22	370	1.67	402	2.13	463	3.15	529	4.33						
11998	1100	325	1.01	357	1.43	389	1.91	418	2.41	473	3.46	531	4.65	591	5.98				
13089	1200	349	1.21	379	1.68	409	2.17	436	2.71	488	3.82	538	5.02	593	6.38	647	7.84		
14179	1300	373	1.44	401	1.96	428	2.47	455	3.04	504	4.22	550	5.47	598	6.82	650	8.31	699	9.90
15270	1400	397	1.70	424	2.28	449	2.82	475	3.40	521	4.65	566	5.96	608	7.33	653	8.83	702	10.45
16361	1500	422	1.99	446	2.64	471	3.21	494	3.81	540	5.11	582	6.49	623	7.92	661	9.41	705	11.05
17452	1600	446	2.32	470	3.02	493	3.64	515	4.26	559	5.62	599	7.06	638	8.56	675	10.10	712	11.72
18542	1700	471	2.69	494	3.43	516	4.12	537	4.77	578	6.17	617	7.67	654	9.23	691	10.84	725	12.50
19633	1800	496	3.11	518	3.88	538	4.64	559	5.32	598	6.76	636	8.32	671	9.95	707	11.62	741	13.34
20724	1900	521	3.56	542	4.37	561	5.21	581	5.93	618	7.40	656	9.03	690	10.71	723	12.45	756	14.23
21815	2000	547	4.06	566	4.91	585	5.79	604	6.59	639	8.12	675	9.78	709	11.53	741	13.33	773	15.18
22905	2100	572	4.62	591	5.50	609	6.42	626	7.30	661	8.90	695	10.59	728	12.40	759	14.26	789	16.18

		4.00" SP		4.50" SP		5.00" SP		5.50" SP		6.00" SP		6.50" SP		7.00" SP		7.50" SP		8.00" SP	
CFM	OV	RPM	BHP	RPM	BHP	RPM	BHP	RPM	BHP	RPM	BHP	RPM	BHP	RPM	BHP	RPM	BHP	RPM	BHP
18542	1700	760	14.23	799	16.10	839	18.06	878	20.10	916	22.19								
19633	1800	773	15.10	806	16.95	843	18.93	880	20.99	918	23.13	954	25.33	988	27.58				
20724	1900	788	16.06	818	17.93	850	19.88	885	21.97	920	24.12	956	26.35	990	28.66	1024	31.01	1056	33.39
21815	2000	804	17.07	833	19.00	862	20.96	892	23.02	925	25.20	958	27.45	993	29.78	1026	32.17	1058	34.63
22905	2100	820	18.13	849	20.12	877	22.15	904	24.21	933	26.36	964	28.64	995	30.98	1028	33.41	1060	35.88
23996	2200	836	19.24	865	21.30	893	23.39	919	25.52	946	27.68	973	29.91	1002	32.28	1032	34.72	1062	37.22
25087	2300	854	20.41	881	22.53	909	24.69	935	26.88	961	29.11	986	31.37	1011	33.67	1039	36.13	1068	38.66
26178	2400	872	21.64	898	23.83	925	26.05	951	28.30	976	30.59	1001	32.92	1025	35.28	1049	37.65	1075	40.18
27268	2500	891	22.93	917	25.18	941	27.47	967	29.79	992	32.14	1017	34.53	1040	36.95	1063	39.40	1086	41.87
28359	2600	910	24.29	935	26.60	960	28.96	984	31.35	1008	33.76	1033	36.21	1056	38.69	1079	41.20	1101	43.75
29450	2700	930	25.72	954	28.09	978	30.51	1001	32.96	1025	35.45	1049	37.96	1072	40.50	1094	43.08	1116	45.68
30541	2800	949	27.22	974	29.66	997	32.13	1020	34.65	1042	37.20	1065	39.78	1088	42.38	1110	45.02	1132	47.69
31631	2900	969	28.80	993	31.29	1016	33.83	1039	36.41	1061	39.02	1082	41.67	1104	44.34	1126	47.04	1148	49.77
32722	3000	988	30.45	1012	33.01	1036	35.61	1058	38.24	1080	40.92	1101	43.63	1121	46.37	1143	49.14	1164	51.93
33813	3100	1008	32.17	1032	34.80	1055	37.46	1077	40.16	1099	42.90	1120	45.67	1140	48.47	1160	51.31	1180	54.17
34904	3200	1030	34.07	1052	36.67	1075	39.40	1097	42.16	1118	44.96	1139	47.79	1159	50.66	1178	53.55	1197	56.49
35994	3300	1052	36.05	1072	38.64	1094	41.42	1116	44.25	1137	47.10	1158	50.00	1178	52.93	1197	55.89	1216	58.88
37085	3400	1074	38.13	1094	40.78	1114	43.53	1136	46.42	1157	49.34	1177	52.30	1197	55.28	1216	58.30	1235	61.36
38176	3500	1096	40.30	1115	43.01	1135	45.76	1156	48.68	1176	51.66	1196	54.68	1216	57.73	1235	60.82	1254	63.93
39267	3600	1118	42.57	1137	45.35	1156	48.15	1175	51.03	1196	54.08	1216	57.16	1235	60.27	1254	63.42	1273	66.60

		9.00" SP		10.00" SP		11.00" SP		12.00" SP		13.00" SP		14.00" SP		15.00" SP		16.00" SP		17.00" SP	
CFM	OV	RPM	BHP	RPM	BHP	RPM	BHP	RPM	BHP	RPM	BHP	RPM	BHP	RPM	BHP	RPM	BHP	RPM	BHP
27268	2500	1137	47.16	1189	52.71	1244	58.54	1297	64.56	1348	70.73								
28359	2600	1146	48.94	1196	54.57	1246	60.39	1299	66.48	1350	72.75	1399	79.17	1446	85.69				
29450	2700	1159	50.97	1204	56.50	1252	62.40	1301	68.49	1352	74.82	1401	81.35	1448	88.01	1494	94.77		
30541	2800	1174	53.11	1215	58.63	1259	64.47	1307	70.65	1354	77.00	1403	83.58	1450	90.34	1496	97.24	1540	104.23
31631	2900	1190	55.32	1229	60.97	1269	66.71	1314	72.90	1359	79.32	1405	85.92	1453	92.73	1498	99.72	1542	106.86
32722	3000	1206	57.60	1245	63.38	1283	69.27	1323	75.30	1366	81.75	1410	88.40	1455	95.25	1500	102.29	1544	109.50
33813	3100	1222	59.97	1261	65.87	1299	71.88	1336	77.98	1374	84.31	1417	91.01	1459	97.89	1502	104.97	1547	112.25
34904	3200	1238	62.41	1277	68.44	1314	74.58	1350	80.82	1386	87.13	1425	93.74	1466	100.69	1507	107.80	1549	115.10
35994	3300	1254	64.94	1293	71.10	1330	77.36	1366	83.72	1401	90.18	1436	96.70	1473	103.58	1513	110.78	1553	118.11
37085	3400	1271	67.56	1309	73.85	1346	80.23	1382	86.71	1416	93.30	1450	99.97	1484	106.70	1521	113.84	1560	121.27
38176	3500	1290	70.25	1325	76.68	1362	83.19	1398	89.80	1432	96.50	1465	103.30	1498	110.18	1531	117.12	1567	124.52
39267	3600	1308	73.04	1343	79.60	1378	86.25	1414	92.98	1448	99.81	1481	106.73	1513	113.74	1545	120.83	1577	127.99
40357	3700	1327	75.92	1361	82.60	1395	89.39	1430	96.25	1464	103.21	1497	110.25	1529	117.39	1560	124.61	1591	131.90
41448	3800	1346	78.91	1380	85.71	1413	92.62	1446	99.63	1480	106.71	1513	113.88	1545	121.14	1576	128.48	1606	135.91
42539	3900	1365	81.99	1399	88.92	1432	95.95	1463	103.10	1496	110.31	1529	117.60	1561	124.99	1591	132.46	1622	140.01

Performance shown is for installation type B & D - Free or ducted inlet, Ducted outlet. Underlined ratings indicate maximum static efficiency. Power rating (BHP) does not include drive losses. Performance ratings do not include the effects of appurtenances in the airstream. NOTE: Ratings shown apply also to model QBCA.

CLASS 1 | CLASS 2 | CLASS 3

BCA-445 SINGLE WIDTH

CONSTANT SPEED PERFORMANCE CURVES

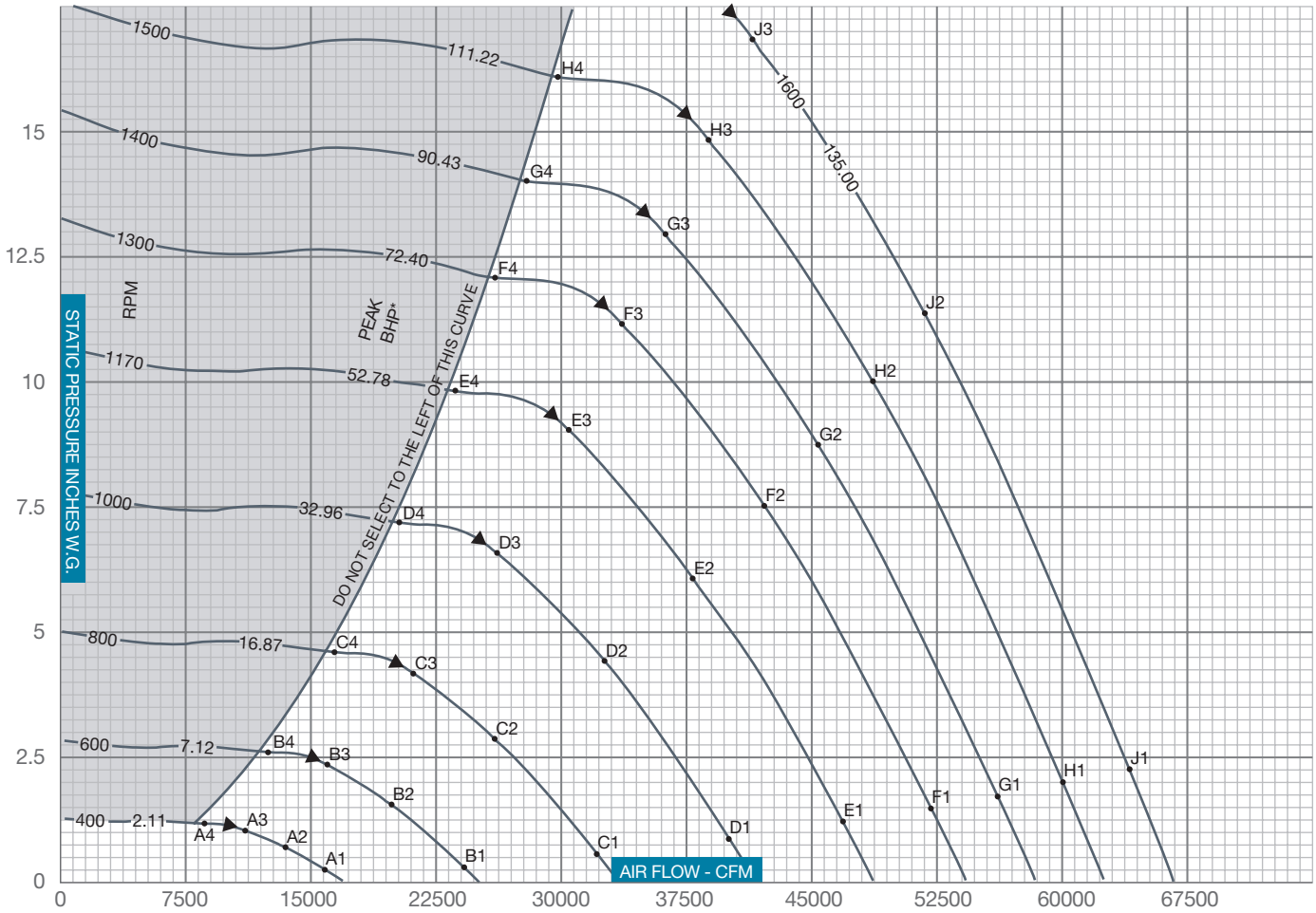

▲ PEAK STATIC EFFICIENCY
* Peak BHP does not include drive losses

$$\%\text{STATIC EFFICIENCY} = \frac{\text{CFM x SP x .0157}}{\text{BHP}}$$

$$\text{Outlet Velocity (OV) in feet per minute} = \frac{\text{CFM}}{\text{Outlet Area}}$$

SOUND POWER LEVELS x 10^{-12} WATT

The sound power level ratings shown are in decibels, referred to 10^{-12} watts calculated per AMCA Standard 301. Values shown are for inlet L_{wi} sound power levels for installation Type B, free inlet, ducted outlet. Ratings do not include the effects of duct end correction.

FAN RPM	FAN SP	SOUND POINT	BAND / FREQUENCY 1 / 63	2 / 125	3 / 250	4 / 500	5 / 1000	6 / 2000	7 / 4000	8 / 8000
400	0.25	A1	84	75	76	75	66	60	55	50
	0.71	A2	82	73	71	70	63	58	53	48
	1.06	A3	80	72	67	67	61	57	51	46
	1.20	A4	78	72	66	66	60	56	50	45
600	0.32	B1	93	91	87	88	83	75	69	64
	1.60	B2	92	88	81	79	76	70	64	59
	2.37	B3	91	87	79	76	73	68	63	58
	2.70	B4	91	86	79	75	72	67	62	57
800	0.57	C1	98	103	92	94	93	85	77	72
	2.85	C2	99	100	89	86	85	78	73	68
	4.22	C3	99	97	88	83	82	77	72	67
	4.79	C4	101	96	88	82	81	75	71	65
1000	0.89	D1	102	107	100	98	98	92	85	79
	4.46	D2	103	106	97	92	90	85	79	74
	6.60	D3	104	104	96	89	87	83	78	73
	7.49	D4	105	103	96	88	86	82	77	72
1170	1.22	E1	104	110	106	101	102	97	90	83
	6.10	E2	106	109	103	96	94	90	84	79
	9.03	E3	106	108	102	94	90	88	83	78
	10.25	E4	108	108	101	93	90	87	82	77

FAN RPM	FAN SP	SOUND POINT	BAND / FREQUENCY 1 / 63	2 / 125	3 / 250	4 / 500	5 / 1000	6 / 2000	7 / 4000	8 / 8000
1300	1.51	F1	106	112	110	103	104	101	93	86
	7.53	F2	107	112	107	98	96	93	87	82
	11.15	F3	108	111	105	97	93	91	86	81
	12.66	F4	109	111	104	97	92	90	85	80
1400	1.75	G1	108	113	113	105	106	103	95	89
	8.74	G2	109	113	110	100	98	96	89	84
	12.93	G3	109	113	108	99	94	93	88	83
	14.68	G4	111	114	107	99	94	92	87	82
1500	2.01	H1	109	114	116	106	108	106	98	91
	10.03	H2	110	115	113	102	99	98	92	86
	14.84	H3	111	115	111	101	96	95	90	85
	16.85	H4	112	116	109	101	95	94	89	84
1600	2.28	J1	110	115	119	107	109	108	100	92
	11.41	J2	111	116	116	104	101	100	93	88
	16.89	J3	112	117	113	103	97	97	92	87

BCA-490 SINGLE WIDTH

WHEEL DIAMETER: 49.00"
WHEEL CIRCUMFERENCE: 12.83'
OUTLET AREA: 13.240 SQ. FT.
OUTLET SIZE: 38⅞" X 49¹⁄₁₆"
INLET DIAMETER: 51½" O.D.

MAX SPEEDS	CLASS 1	CLASS 2	CLASS 3
Up to 250°F	875	1141	1520
251°F to 400°F*	831	1084	1444
401°F to 700°F*	718	936	1246
Above 700°F	CONTACT FACTORY		

*Special hi-temp construction required
Tip Speed (fpm) = 12.83 x RPM
Max BHP = 53.349 x $(RPM/1000)^3$

		0.25" SP		0.50" SP		0.75" SP		1.00" SP		1.50" SP		2.00" SP		2.50" SP		3.00" SP		3.50" SP	
CFM	OV	RPM	BHP	RPM	BHP	RPM	BHP	RPM	BHP	RPM	BHP	RPM	BHP	RPM	BHP	RPM	BHP	RPM	BHP
9257	700	215	0.52	257	0.90	297	1.34	340	1.84										
10580	800	234	0.65	272	1.07	307	1.53	342	2.04										
11902	900	254	0.81	289	1.26	321	1.76	351	2.29	417	3.50								
13225	1000	274	1.00	307	1.48	336	2.02	365	2.59	420	3.82	480	5.25						
14547	1100	295	1.22	325	1.74	353	2.31	380	2.92	429	4.20	482	5.64	537	7.25				
15870	1200	317	1.47	344	2.04	371	2.64	396	3.28	443	4.64	488	6.09	539	7.73	588	9.50		
17192	1300	338	1.74	364	2.38	389	3.00	413	3.68	458	5.12	500	6.63	543	8.27	590	10.08	635	12.00
18515	1400	361	2.06	385	2.76	408	3.42	431	4.13	473	5.64	514	7.23	552	8.89	593	10.71	637	12.67
19837	1500	383	2.42	405	3.20	428	3.89	449	4.61	490	6.20	529	7.87	565	9.61	601	11.41	640	13.40
21160	1600	405	2.82	427	3.67	448	4.41	468	5.16	508	6.81	544	8.56	580	10.37	613	12.25	647	14.21
22482	1700	428	3.27	448	4.16	468	4.99	487	5.78	525	7.48	561	9.30	594	11.19	627	13.14	658	15.15
23805	1800	451	3.77	470	4.70	489	5.62	508	6.45	543	8.20	578	10.09	610	12.06	642	14.09	673	16.18
25127	1900	473	4.32	492	5.30	510	6.32	528	7.19	561	8.97	595	10.95	627	12.99	657	15.10	687	17.26
26450	2000	496	4.93	514	5.96	531	7.02	548	7.99	581	9.85	613	11.86	644	13.98	673	16.16	702	18.40
27772	2100	519	5.60	537	6.67	553	7.78	569	8.85	601	10.79	631	12.83	661	15.03	690	17.29	716	19.61

		4.00" SP		4.50" SP		5.00" SP		5.50" SP		6.00" SP		6.50" SP		7.00" SP		7.50" SP		8.00" SP	
CFM	OV	RPM	BHP	RPM	BHP	RPM	BHP	RPM	BHP	RPM	BHP	RPM	BHP	RPM	BHP	RPM	BHP	RPM	BHP
22482	1700	691	17.25	726	19.52	762	21.90	798	24.37	832	26.91								
23805	1800	702	18.31	732	20.55	766	22.96	800	25.46	834	28.04	866	30.72	897	33.44				
25127	1900	716	19.47	743	21.73	772	24.11	804	26.64	836	29.25	868	31.95	900	34.75	930	37.60	959	40.49
26450	2000	730	20.69	757	23.03	783	25.42	810	27.91	840	30.56	870	33.28	902	36.11	932	39.01	961	41.99
27772	2100	744	21.98	771	24.39	796	26.86	821	29.36	847	31.96	876	34.73	904	37.56	934	40.50	963	43.50
29095	2200	759	23.33	786	25.82	811	28.36	835	30.94	859	33.56	883	36.27	910	39.14	937	42.10	965	45.13
30417	2300	775	24.75	800	27.32	825	29.94	849	32.59	872	35.29	895	38.03	918	40.83	944	43.80	970	46.88
31740	2400	792	26.24	816	28.89	840	31.59	864	34.32	887	37.10	909	39.91	931	42.77	952	45.65	976	48.72
33062	2500	809	27.81	832	30.53	855	33.31	878	36.12	901	38.97	923	41.87	945	44.80	965	47.77	986	50.77
34385	2600	827	29.45	850	32.26	872	35.11	893	38.01	916	40.93	938	43.90	959	46.91	980	49.96	999	53.04
35707	2700	844	31.19	867	34.06	889	36.99	909	39.96	931	42.98	952	46.02	973	49.11	994	52.23	1014	55.39
37030	2800	862	33.01	884	35.96	906	38.96	926	42.01	947	45.10	967	48.23	988	51.39	1008	54.59	1028	57.82
38352	2900	880	34.91	902	37.94	923	41.02	944	44.14	963	47.31	983	50.52	1003	53.76	1023	57.04	1043	60.35
39675	3000	898	36.91	920	40.02	941	43.17	961	46.37	981	49.61	1000	52.90	1018	56.22	1038	59.58	1057	62.96
40997	3100	916	39.01	937	42.19	958	45.42	978	48.69	998	52.01	1017	55.37	1035	58.77	1053	62.21	1072	65.68
42320	3200	935	41.31	955	44.46	976	47.77	996	51.12	1015	54.51	1034	57.94	1052	61.42	1070	64.93	1087	68.49
43642	3300	955	43.71	974	46.85	994	50.22	1014	53.65	1033	57.11	1051	60.62	1069	64.17	1087	67.76	1104	71.39
44965	3400	975	46.23	993	49.44	1012	52.78	1031	56.28	1050	59.82	1069	63.41	1087	67.03	1104	70.69	1121	74.39
46287	3500	995	48.86	1013	52.15	1031	55.48	1049	59.02	1068	62.64	1086	66.30	1104	70.00	1122	73.74	1138	77.51
47610	3600	1015	51.62	1033	54.98	1050	58.39	1067	61.87	1086	65.57	1104	69.31	1122	73.08	1139	76.89	1156	80.74

		9.00" SP		10.00" SP		11.00" SP		12.00" SP		13.00" SP		14.00" SP		15.00" SP		16.00" SP		17.00" SP	
CFM	OV	RPM	BHP	RPM	BHP	RPM	BHP	RPM	BHP	RPM	BHP	RPM	BHP	RPM	BHP	RPM	BHP	RPM	BHP
33062	2500	1032	57.18	1080	63.91	1130	70.98	1178	78.27	1224	85.76								
34385	2600	1040	59.34	1086	66.16	1132	73.22	1180	80.60	1226	88.21	1270	96.00	1313	103.90				
35707	2700	1052	61.80	1093	68.50	1137	75.66	1182	83.04	1228	90.72	1272	98.63	1315	106.71	1356	114.90		
37030	2800	1066	64.39	1103	71.09	1144	78.17	1187	85.67	1230	93.37	1274	101.34	1317	109.53	1358	117.90	1398	126.38
38352	2900	1080	67.07	1116	73.93	1153	80.89	1193	88.39	1234	96.18	1276	104.18	1319	112.44	1361	120.91	1401	129.56
39675	3000	1095	69.84	1131	76.85	1165	83.98	1201	91.30	1240	99.12	1280	107.19	1321	115.49	1363	124.02	1403	132.77
40997	3100	1109	72.71	1145	79.87	1179	87.16	1213	94.55	1248	102.22	1287	110.35	1325	118.69	1364	127.28	1405	136.10
42320	3200	1124	75.67	1160	82.98	1194	90.42	1226	97.99	1259	105.64	1294	113.65	1331	122.08	1368	130.70	1406	139.55
43642	3300	1139	78.74	1174	86.21	1208	93.80	1241	101.51	1272	109.34	1304	117.25	1338	125.59	1374	134.31	1411	143.20
44965	3400	1154	81.91	1189	89.54	1222	97.28	1255	105.14	1286	113.12	1317	121.21	1348	129.37	1381	138.03	1417	147.04
46287	3500	1171	85.18	1204	92.97	1237	100.87	1269	108.88	1301	117.01	1331	125.25	1361	133.59	1390	142.01	1423	150.98
47610	3600	1188	88.56	1219	96.51	1252	104.57	1284	112.74	1315	121.01	1345	129.41	1374	137.91	1403	146.50	1432	155.18
48932	3700	1205	92.05	1236	100.15	1267	108.39	1299	116.71	1330	125.14	1359	133.68	1389	142.33	1417	151.09	1445	159.93
50255	3800	1223	95.67	1253	103.92	1283	112.30	1313	120.80	1344	129.38	1374	138.07	1403	146.87	1431	155.78	1458	164.79
51577	3900	1240	99.41	1271	107.81	1300	116.34	1329	125.00	1359	133.74	1389	142.59	1417	151.54	1445	160.60	1473	169.76

Performance shown is for installation type B & D - Free or ducted inlet, Ducted outlet. Underlined ratings indicate maximum static efficiency. Power rating (BHP) does not include drive losses. Performance ratings do not include the effects of appurtenances in the airstream.

CLASS 1 | CLASS 2 | CLASS 3

BCA-490 SINGLE WIDTH

CONSTANT SPEED PERFORMANCE CURVES

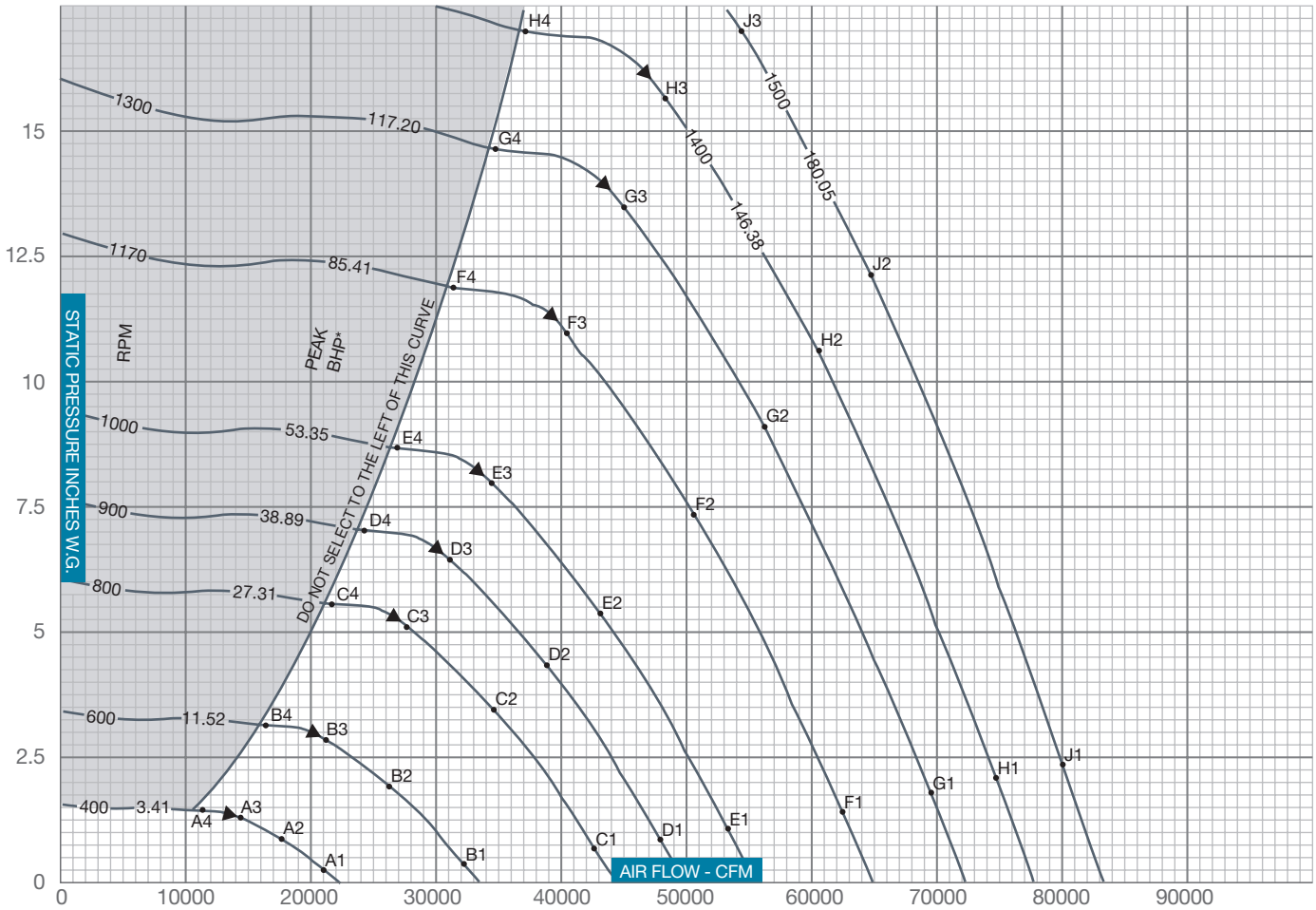

▲ PEAK STATIC EFFICIENCY
* Peak BHP does not include drive losses

$$\% \text{ STATIC EFFICIENCY} = \frac{\text{CFM x SP x .0157}}{\text{BHP}}$$

$$\text{Outlet Velocity (OV) in feet per minute} = \frac{\text{CFM}}{\text{Outlet Area}}$$

SOUND POWER LEVELS x 10^{-12} WATT

The sound power level ratings shown are in decibels, referred to 10^{-12} watts calculated per AMCA Standard 301. Values shown are for inlet L_{wi} sound power levels for installation Type B, free inlet, ducted outlet. Ratings do not include the effects of duct end correction.

FAN RPM	FAN SP	SOUND POINT	BAND / FREQUENCY 1 / 63	2 / 125	3 / 250	4 / 500	5 / 1000	6 / 2000	7 / 4000	8 / 8000
400	0.25	A1	88	79	81	80	71	65	60	55
	0.86	A2	85	76	74	73	66	61	56	51
	1.28	A3	83	75	70	70	64	60	54	49
	1.45	A4	81	75	69	69	63	59	53	48
600	0.39	B1	96	94	90	91	86	78	72	67
	1.95	B2	96	92	84	82	79	73	67	62
	2.88	B3	95	90	82	79	76	71	66	61
	3.27	B4	94	89	82	78	75	70	65	60
800	0.69	C1	101	106	95	97	96	87	80	75
	3.46	C2	102	103	91	89	88	81	76	71
	5.12	C3	103	100	91	85	84	79	75	69
	5.81	C4	104	99	91	85	84	78	74	68
900	0.88	D1	103	109	99	99	99	91	84	79
	4.38	D2	104	106	96	92	91	85	79	74
	6.48	D3	105	104	95	89	87	83	78	73
	7.35	D4	106	103	95	88	87	82	77	72
1000	1.08	E1	105	110	103	101	101	95	87	82
	5.40	E2	106	109	100	95	93	88	82	77
	8.00	E3	107	107	99	92	90	86	81	76
	9.08	E4	108	106	99	91	89	85	80	75

FAN RPM	FAN SP	SOUND POINT	BAND / FREQUENCY 1 / 63	2 / 125	3 / 250	4 / 500	5 / 1000	6 / 2000	7 / 4000	8 / 8000
1170	1.48	F1	108	113	109	104	105	100	92	86
	7.40	F2	109	112	106	99	97	93	87	82
	10.95	F3	110	111	105	97	93	91	86	81
	12.43	F4	111	111	104	96	93	90	84	79
1300	1.83	G1	110	115	113	106	107	104	96	89
	9.13	G2	111	115	110	101	99	96	90	85
	13.52	G3	111	114	108	100	96	94	89	84
	15.34	G4	113	115	107	100	95	93	87	83
1400	2.12	H1	111	116	116	108	109	106	98	92
	10.59	H2	112	116	113	103	101	99	92	87
	15.68	H3	113	116	111	102	97	96	91	86
	17.00	H4	114	117	110	102	97	95	90	85
1500	2.43	J1	112	117	119	109	111	109	100	94
	12.16	J2	113	118	116	105	102	101	94	89
	17.00	J3	114	118	114	104	100	99	93	88

BCA-542 SINGLE WIDTH

WHEEL DIAMETER: 54.25"
WHEEL CIRCUMFERENCE: 14.20'
OUTLET AREA: 16.255 SQ. FT.
OUTLET SIZE: 43 1/16" X 54 3/8"
INLET DIAMETER: 56 3/4" O.D.

MAX SPEEDS	CLASS 1	CLASS 2	CLASS 3
Up to 250°F	790	1031	1373
251°F to 400°F*	751	979	1304
401°F to 700°F*	648	845	1126
Above 700°F	CONTACT FACTORY		

*Special hi-temp construction required
Tip Speed (fpm) = 14.20 x RPM
Max BHP = 88.745 x (RPM/1000)^3

		0.25" SP		0.50" SP		0.75" SP		1.00" SP		1.50" SP		2.00" SP		2.50" SP		3.00" SP		3.50" SP	
CFM	OV	RPM	BHP	RPM	BHP	RPM	BHP	RPM	BHP	RPM	BHP	RPM	BHP	RPM	BHP	RPM	BHP	RPM	BHP
11347	700	195	0.63	232	1.11	268	1.64	307	2.26										
12968	800	211	0.79	246	1.31	277	1.88	309	2.50										
14589	900	229	0.99	261	1.55	290	2.16	317	2.81	376	4.30								
16210	1000	248	1.22	277	1.82	304	2.48	330	3.17	380	4.68	434	6.43						
17831	1100	266	1.50	293	2.13	319	2.83	343	3.57	388	5.14	436	6.91	485	8.89				
19453	1200	286	1.80	311	2.50	335	3.23	358	4.02	400	5.68	441	7.47	487	9.48	531	11.65		
21074	1300	306	2.14	329	2.92	351	3.68	373	4.51	414	6.27	451	8.13	490	10.14	533	12.35	574	14.71
22695	1400	326	2.52	348	3.39	368	4.19	389	5.06	427	6.91	464	8.86	498	10.89	536	13.13	576	15.53
24316	1500	346	2.96	366	3.92	386	4.77	405	5.66	443	7.60	477	9.65	511	11.77	542	13.99	578	16.42
25937	1600	366	3.45	385	4.49	405	5.41	422	6.33	458	8.35	491	10.49	524	12.71	554	15.01	584	17.41
27558	1700	387	4.00	405	5.10	423	6.12	440	7.08	474	9.17	506	11.40	537	13.72	567	16.11	595	18.57
29179	1800	407	4.62	425	5.77	442	6.89	458	7.91	490	10.05	522	12.37	551	14.79	580	17.27	607	19.83
30800	1900	428	5.29	445	6.50	460	7.75	477	8.81	507	11.00	538	13.42	566	15.92	593	18.51	620	21.16
32421	2000	448	6.04	465	7.30	480	8.61	495	9.79	525	12.07	554	14.53	582	17.13	608	19.81	634	22.56
34042	2100	469	6.86	485	8.18	499	9.54	514	10.85	542	13.23	570	15.73	597	18.42	623	21.19	647	24.04

		4.00" SP		4.50" SP		5.00" SP		5.50" SP		6.00" SP		6.50" SP		7.00" SP		7.50" SP		8.00" SP	
CFM	OV	RPM	BHP	RPM	BHP	RPM	BHP	RPM	BHP	RPM	BHP	RPM	BHP	RPM	BHP	RPM	BHP	RPM	BHP
27558	1700	624	21.15	656	23.93	688	26.84	720	29.87	751	32.98								
29179	1800	634	22.45	661	25.19	692	28.14	722	31.20	753	34.37	782	37.65	811	40.98				
30800	1900	646	23.87	671	26.64	697	29.55	726	32.65	755	35.85	784	39.17	812	42.59	840	46.09	866	49.63
32421	2000	659	25.36	683	28.23	707	31.15	732	34.21	759	37.46	786	40.79	814	44.27	842	47.82	868	51.46
34042	2100	672	26.94	696	29.90	719	32.92	742	35.99	765	39.18	791	42.57	817	46.04	843	49.65	870	53.33
35663	2200	686	28.60	710	31.65	732	34.76	754	37.93	776	41.14	798	44.46	822	47.98	847	51.60	871	55.32
37285	2300	700	30.34	723	33.49	745	36.69	767	39.95	788	43.26	808	46.62	829	50.04	852	53.69	876	57.46
38906	2400	716	32.16	737	35.42	759	38.72	780	42.07	801	45.47	821	48.92	841	52.43	860	55.96	882	59.72
40527	2500	731	34.08	752	37.43	772	40.83	793	44.28	814	47.77	834	51.32	853	54.91	872	58.56	891	62.23
42148	2600	747	36.10	767	39.54	787	43.04	807	46.59	827	50.18	847	53.82	866	57.50	885	61.24	903	65.02
43769	2700	762	38.23	783	41.75	803	45.34	821	48.99	841	52.68	860	56.41	879	60.19	898	64.02	916	67.89
45390	2800	778	40.46	799	44.08	818	47.76	837	51.49	855	55.28	873	59.12	892	62.99	911	66.91	929	70.87
47011	2900	795	42.80	815	46.51	834	50.28	852	54.11	870	57.99	888	61.92	906	65.90	924	69.91	942	73.97
48632	3000	811	45.25	831	49.06	850	52.92	868	56.84	886	60.81	903	64.84	920	68.92	937	73.03	955	77.18
50253	3100	827	47.82	847	51.72	865	55.68	884	59.69	901	63.75	918	67.87	935	72.04	951	76.26	968	80.51
51874	3200	845	50.63	863	54.50	882	58.55	900	62.66	917	66.82	934	71.03	950	75.28	966	79.59	982	83.95
53495	3300	863	53.58	879	57.43	898	61.56	916	65.76	933	70.01	950	74.31	966	78.66	982	83.06	997	87.50
55116	3400	881	56.67	897	60.61	914	64.69	932	68.98	949	73.33	965	77.72	982	82.16	997	86.65	1013	91.19
56738	3500	899	59.89	915	63.93	931	68.01	948	72.34	965	76.78	981	81.27	997	85.80	1013	90.38	1028	95.01
58359	3600	917	63.27	933	67.40	949	71.57	964	75.84	981	80.37	997	84.95	1013	89.58	1029	94.25	1044	98.97

		9.00" SP		10.00" SP		11.00" SP		12.00" SP		13.00" SP		14.00" SP		15.00" SP		16.00" SP		17.00" SP	
CFM	OV	RPM	BHP	RPM	BHP	RPM	BHP	RPM	BHP	RPM	BHP	RPM	BHP	RPM	BHP	RPM	BHP	RPM	BHP
40527	2500	932	70.08	975	78.34	1021	87.00	1064	95.95	1106	105.13								
42148	2600	940	72.74	981	81.10	1022	89.75	1066	98.80	1107	108.12	1147	117.67	1186	127.36				
43769	2700	951	75.76	987	83.96	1027	92.74	1067	101.79	1109	111.20	1149	120.90	1188	130.80	1225	140.84		
45390	2800	963	78.93	997	87.14	1033	95.82	1072	105.01	1111	114.44	1151	124.21	1190	134.26	1227	144.52	1263	154.91
47011	2900	976	82.21	1008	90.62	1041	99.15	1077	108.35	1115	117.89	1153	127.70	1192	137.82	1229	148.21	1265	158.82
48632	3000	989	85.61	1021	94.20	1053	102.94	1085	111.91	1120	121.50	1156	131.38	1193	141.56	1231	152.02	1267	162.74
50253	3100	1002	89.12	1034	97.90	1065	106.83	1096	115.90	1127	125.30	1162	135.27	1197	145.49	1232	156.01	1269	166.82
51874	3200	1015	92.76	1047	101.72	1078	110.84	1108	120.11	1137	129.49	1169	139.31	1202	149.65	1236	160.21	1270	171.06
53495	3300	1029	96.52	1060	105.67	1091	114.97	1121	124.42	1149	134.02	1178	143.72	1209	153.94	1241	164.64	1274	175.53
55116	3400	1043	100.40	1074	109.75	1104	119.24	1133	128.87	1162	138.66	1189	148.57	1217	158.57	1248	169.20	1280	180.23
56738	3500	1058	104.41	1087	113.96	1117	123.64	1147	133.46	1175	143.43	1202	153.53	1229	163.76	1256	174.07	1286	185.07
58359	3600	1073	108.55	1101	118.30	1131	128.18	1160	138.19	1188	148.34	1215	158.62	1241	169.04	1267	179.57	1294	190.21
59980	3700	1089	112.84	1117	122.76	1144	132.86	1173	143.05	1201	153.39	1228	163.86	1254	174.46	1280	185.20	1305	196.03
61601	3800	1104	117.27	1132	127.38	1159	137.66	1186	148.07	1214	158.59	1241	169.25	1267	180.03	1293	190.95	1317	202.00
63222	3900	1120	121.85	1148	132.15	1174	142.60	1200	153.22	1227	163.94	1254	174.78	1280	185.76	1305	196.86	1330	208.08

Performance shown is for installation type B & D - Free or ducted inlet, Ducted outlet. Underlined ratings indicate maximum static efficiency. Power rating (BHP) does not include drive losses. Performance ratings do not include the effects of appurtenances in the airstream.

CLASS 1 | CLASS 2 | CLASS 3

BCA-542 SINGLE WIDTH

CONSTANT SPEED PERFORMANCE CURVES

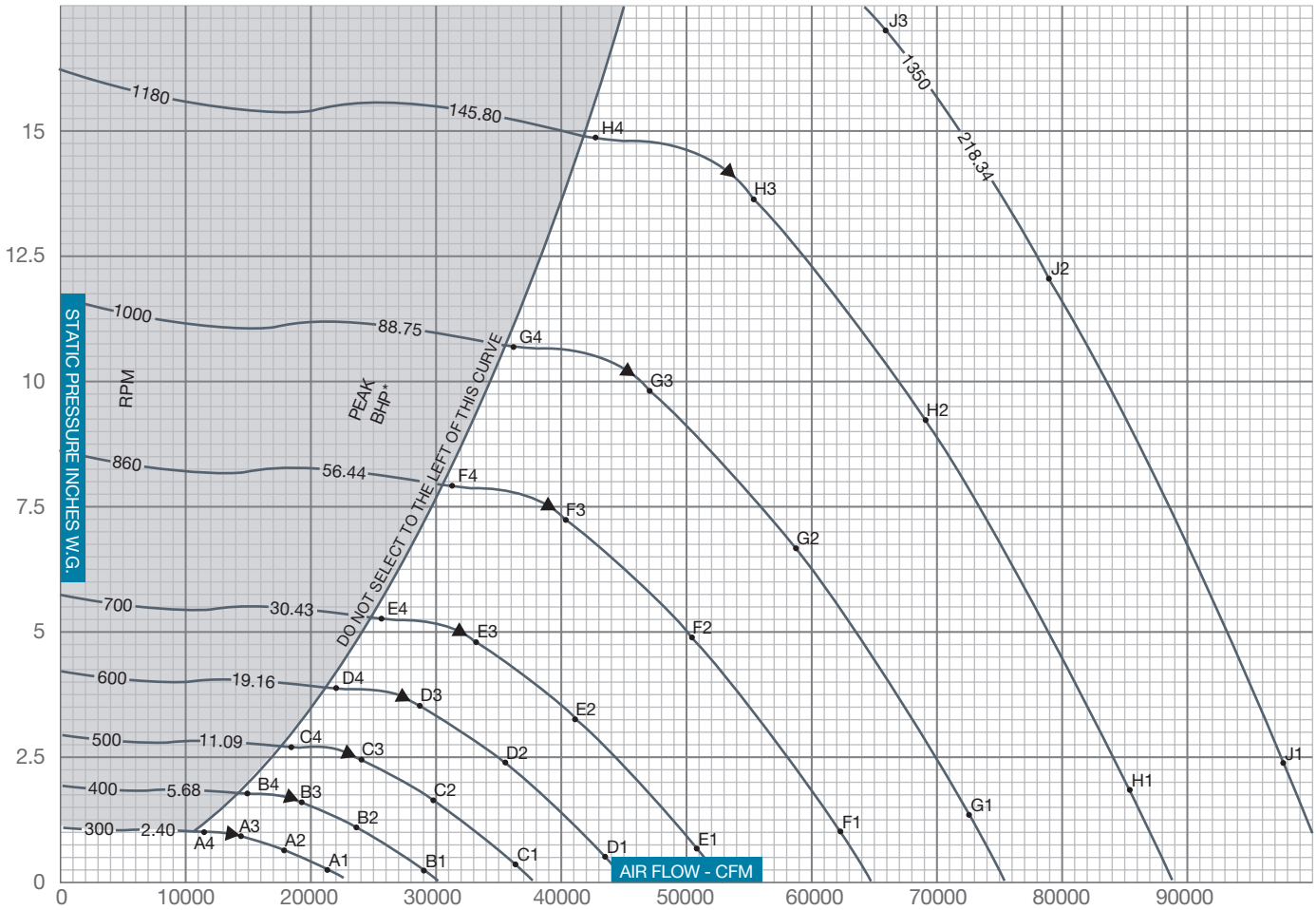

▲ PEAK STATIC EFFICIENCY
* Peak BHP does not include drive losses

$$\% \text{ STATIC EFFICIENCY} = \frac{\text{CFM x SP x .0157}}{\text{BHP}}$$

$$\text{Outlet Velocity (OV) in feet per minute} = \frac{\text{CFM}}{\text{Outlet Area}}$$

SOUND POWER LEVELS x 10^{-12} WATT

The sound power level ratings shown are in decibels, referred to 10^{-12} watts calculated per AMCA Standard 301. Values shown are for inlet L_{wi} sound power levels for installation Type B, free inlet, ducted outlet. Ratings do not include the effects of duct end correction.

FAN RPM	FAN SP	SOUND POINT	BAND / FREQUENCY 1 / 63	2 / 125	3 / 250	4 / 500	5 / 1000	6 / 2000	7 / 4000	8 / 8000
300	0.25	A1	79	76	77	72	65	59	54	49
	0.60	A2	78	72	70	67	61	55	50	45
	0.88	A3	76	70	67	64	59	54	49	44
	1.00	A4	75	70	66	63	58	53	48	43
400	0.25	B1	92	82	85	84	75	68	63	58
	1.06	B2	89	79	77	76	69	64	59	54
	1.57	B3	86	78	73	73	67	63	58	52
	1.78	B4	85	79	72	72	66	62	56	51
500	0.33	C1	97	91	89	89	83	75	70	65
	1.66	C2	95	88	82	81	76	70	65	60
	2.45	C3	93	86	80	78	74	69	64	59
	2.78	C4	92	86	79	77	73	68	63	58
600	0.48	D1	100	98	93	94	89	81	75	70
	2.38	D2	99	95	87	85	82	76	71	65
	3.53	D3	98	93	85	82	79	74	69	64
	4.01	D4	98	92	85	81	78	73	68	63
700	0.65	E1	102	104	95	97	94	86	80	74
	3.25	E2	103	101	91	89	87	80	75	70
	4.80	E3	102	99	90	86	84	79	74	69
	5.45	E4	103	98	90	85	83	78	73	68

FAN RPM	FAN SP	SOUND POINT	BAND / FREQUENCY 1 / 63	2 / 125	3 / 250	4 / 500	5 / 1000	6 / 2000	7 / 4000	8 / 8000
860	0.98	F1	106	111	100	102	101	93	86	80
	4.90	F2	107	108	97	94	93	87	81	76
	7.25	F3	108	106	96	90	89	85	80	75
	8.23	F4	109	104	97	90	89	84	79	74
1000	1.32	G1	109	114	106	104	104	98	91	85
	6.62	G2	110	112	103	98	96	91	85	80
	9.80	G3	110	110	102	95	93	89	84	79
	11.13	G4	112	109	102	94	92	88	83	78
1180	1.84	H1	112	117	113	108	108	104	96	90
	9.22	H2	113	116	110	102	100	96	90	85
	13.65	H3	113	115	108	100	97	94	89	84
	15.50	H4	115	115	107	100	96	93	88	83
1350	2.41	J1	114	119	118	110	111	108	100	94
	12.07	J2	115	119	115	105	103	101	94	89
	17.00	J3	116	119	113	104	100	98	93	88

BCA-600 SINGLE WIDTH

WHEEL DIAMETER: 60.00"
WHEEL CIRCUMFERENCE: 15.71'
OUTLET AREA: 19.91 SQ. FT.
OUTLET SIZE: 47⅝" X 60³⁄₁₆"
INLET DIAMETER: 63¼" O.D.

MAX SPEEDS	CLASS 1	CLASS 2	CLASS 3
Up to 250°F	714	932	1249
251°F to 400°F*	678	885	1187
401°F to 700°F*	585	763	1024
Above 700°F	CONTACT FACTORY		

*Special hi-temp construction required
Tip Speed (fpm) = 15.71 x RPM
Max BHP = 146.859 x (RPM/1000)³

		0.25" SP		0.50" SP		0.75" SP		1.00" SP		1.50" SP		2.00" SP		2.50" SP		3.00" SP		3.50" SP	
CFM	OV	RPM	BHP	RPM	BHP	RPM	BHP	RPM	BHP	RPM	BHP	RPM	BHP	RPM	BHP	RPM	BHP	RPM	BHP
13880	700	176	0.77	210	1.35	242	2.01	277	2.76										
15863	800	191	0.97	222	1.60	250	2.30	279	3.06										
17846	900	207	1.21	236	1.89	262	2.64	286	3.43	340	5.26								
19829	1000	224	1.50	250	2.22	275	3.03	298	3.88	343	5.73	392	7.87						
21812	1100	241	1.83	265	2.60	289	3.46	310	4.37	351	6.29	394	8.46	438	10.87				
23795	1200	258	2.20	281	3.05	303	3.95	323	4.92	362	6.95	399	9.13	440	11.59	480	14.25		
25778	1300	276	2.61	298	3.57	318	4.50	338	5.52	374	7.67	408	9.94	443	12.40	482	15.11	519	17.99
27761	1400	294	3.09	314	4.15	333	5.12	352	6.19	387	8.45	420	10.84	451	13.32	485	16.06	520	18.99
29744	1500	313	3.62	331	4.80	349	5.83	367	6.92	400	9.30	432	11.80	462	14.40	490	17.11	523	20.09
31727	1600	331	4.23	348	5.50	366	6.62	382	7.74	415	10.22	444	12.84	473	15.55	501	18.36	528	21.30
33709	1700	349	4.90	366	6.24	382	7.48	398	8.66	429	11.21	458	13.94	485	16.78	512	19.71	538	22.72
35692	1800	368	5.65	384	7.05	399	8.43	414	9.67	443	12.29	472	15.13	498	18.09	524	21.13	549	24.25
37675	1900	387	6.48	402	7.95	416	9.48	431	10.78	458	13.45	486	16.41	512	19.48	536	22.64	561	25.88
39658	2000	405	7.39	420	8.93	434	10.53	448	11.97	474	14.76	501	17.78	526	20.96	549	24.24	573	27.59
41641	2100	424	8.39	438	10.01	452	11.67	465	13.27	491	16.18	515	19.24	540	22.54	563	25.93	585	29.41

		4.00" SP		4.50" SP		5.00" SP		5.50" SP		6.00" SP		6.50" SP		7.00" SP		7.50" SP		8.00" SP	
CFM	OV	RPM	BHP	RPM	BHP	RPM	BHP	RPM	BHP	RPM	BHP	RPM	BHP	RPM	BHP	RPM	BHP	RPM	BHP
33709	1700	564	25.87	593	29.27	622	32.83	651	36.53	679	40.35								
35692	1800	573	27.46	598	30.82	625	34.42	653	38.17	681	42.04	707	46.05	733	50.13				
37675	1900	584	29.20	607	32.59	631	36.14	656	39.94	682	43.85	709	47.91	735	52.10	759	56.37	783	60.71
39658	2000	596	31.03	618	34.53	639	38.11	662	41.84	686	45.82	711	49.89	736	54.15	761	58.49	785	62.95
41641	2100	608	32.95	630	36.57	650	40.27	671	44.02	692	47.92	715	52.07	738	56.32	763	60.73	787	65.23
43624	2200	620	34.98	642	38.72	662	42.52	682	46.39	701	50.33	721	54.38	743	58.69	766	63.12	788	67.67
45607	2300	633	37.11	654	40.97	674	44.88	694	48.87	713	52.92	731	57.03	750	61.21	771	65.68	792	70.29
47590	2400	647	39.34	666	43.32	686	47.36	705	51.46	724	55.62	742	59.85	760	64.13	778	68.45	797	73.05
49573	2500	661	41.69	680	45.78	698	49.95	717	54.16	736	58.44	754	62.78	771	67.17	788	71.63	806	76.12
51556	2600	675	44.16	694	48.37	712	52.64	729	56.99	748	61.38	766	65.83	783	70.34	800	74.91	816	79.53
53539	2700	689	46.76	708	51.08	726	55.46	743	59.92	760	64.44	778	69.01	795	73.63	812	78.31	828	83.05
55522	2800	704	49.49	722	53.92	740	58.41	757	62.98	773	67.62	790	72.31	807	77.05	823	81.85	840	86.69
57505	2900	718	52.35	736	56.89	754	61.50	771	66.18	787	70.93	803	75.75	819	80.61	835	85.52	851	90.48
59488	3000	733	55.35	751	60.01	768	64.73	785	69.53	801	74.38	816	79.31	832	84.30	847	89.33	863	94.41
61471	3100	748	58.49	766	63.26	783	68.10	799	73.01	815	77.98	830	83.02	845	88.12	860	93.28	875	98.48
63454	3200	764	61.93	780	66.67	797	71.63	813	76.65	829	81.73	844	86.88	859	92.09	874	97.36	888	102.69
65437	3300	780	65.54	795	70.25	812	75.30	828	80.44	843	85.63	859	90.89	873	96.22	888	101.60	902	107.04
67419	3400	796	69.31	811	74.14	826	79.13	842	84.38	858	89.70	873	95.07	887	100.50	902	106.00	916	111.55
69402	3500	813	73.26	827	78.20	842	83.19	857	88.49	872	93.92	887	99.41	902	104.96	916	110.56	930	116.22
71385	3600	829	77.39	844	82.44	858	87.54	872	92.77	887	98.31	902	103.91	916	109.58	930	115.29	944	121.07

		9.00" SP		10.00" SP		11.00" SP		12.00" SP		13.00" SP		14.00" SP		15.00" SP		16.00" SP		17.00" SP	
CFM	OV	RPM	BHP	RPM	BHP	RPM	BHP	RPM	BHP	RPM	BHP	RPM	BHP	RPM	BHP	RPM	BHP	RPM	BHP
49573	2500	843	85.73	882	95.83	923	106.42	962	117.36	1000	128.59								
51556	2600	850	88.98	887	99.20	924	109.78	964	120.85	1001	132.26	1037	143.93	1072	155.79				
53539	2700	859	92.67	893	102.71	929	113.44	965	124.51	1003	136.03	1039	147.88	1074	160.00	1108	172.28		
55522	2800	871	96.55	901	106.58	934	117.21	969	128.45	1004	139.99	1041	151.94	1076	164.23	1109	176.77	1142	189.49
57505	2900	882	100.56	912	110.85	941	121.28	974	132.53	1008	144.20	1042	156.21	1077	168.58	1111	181.29	1144	194.27
59488	3000	894	104.71	923	115.23	952	125.92	981	136.89	1013	148.62	1046	160.71	1079	173.16	1113	185.96	1145	199.07
61471	3100	906	109.01	935	119.75	963	130.68	991	141.77	1019	153.27	1051	165.46	1082	177.97	1114	190.84	1147	204.06
63454	3200	918	113.46	947	124.43	975	135.58	1002	146.92	1028	158.39	1057	170.41	1087	183.05	1117	195.97	1149	209.24
65437	3300	930	118.07	959	129.26	987	140.64	1013	152.20	1039	163.94	1065	175.79	1093	188.31	1122	201.38	1152	214.71
67419	3400	943	122.81	971	134.25	998	145.85	1025	157.64	1050	169.61	1075	181.74	1101	193.97	1128	206.96	1157	220.47
69402	3500	957	127.71	983	139.40	1010	151.24	1037	163.25	1062	175.44	1087	187.80	1111	200.31	1135	212.92	1162	226.38
71385	3600	970	132.78	996	144.70	1022	156.79	1049	169.03	1074	181.45	1098	194.03	1122	206.78	1146	219.66	1170	232.67
73368	3700	984	138.02	1010	150.17	1034	162.51	1061	174.99	1086	187.63	1110	200.44	1134	213.41	1157	226.54	1180	239.79
75351	3800	999	143.45	1024	155.81	1048	168.38	1073	181.12	1098	193.99	1122	207.02	1146	220.22	1169	233.57	1191	247.08
77334	3900	1013	149.05	1038	161.64	1062	174.44	1085	187.42	1110	200.53	1134	213.80	1157	227.22	1180	240.80	1203	254.53

Performance shown is for installation type B & D - Free or ducted inlet, Ducted outlet. Underlined ratings indicate maximum static efficiency. Power rating (BHP) does not include drive losses. Performance ratings do not include the effects of appurtenances in the airstream.

CLASS 1 | CLASS 2 | CLASS 3

BCA-600 SINGLE WIDTH

CONSTANT SPEED PERFORMANCE CURVES

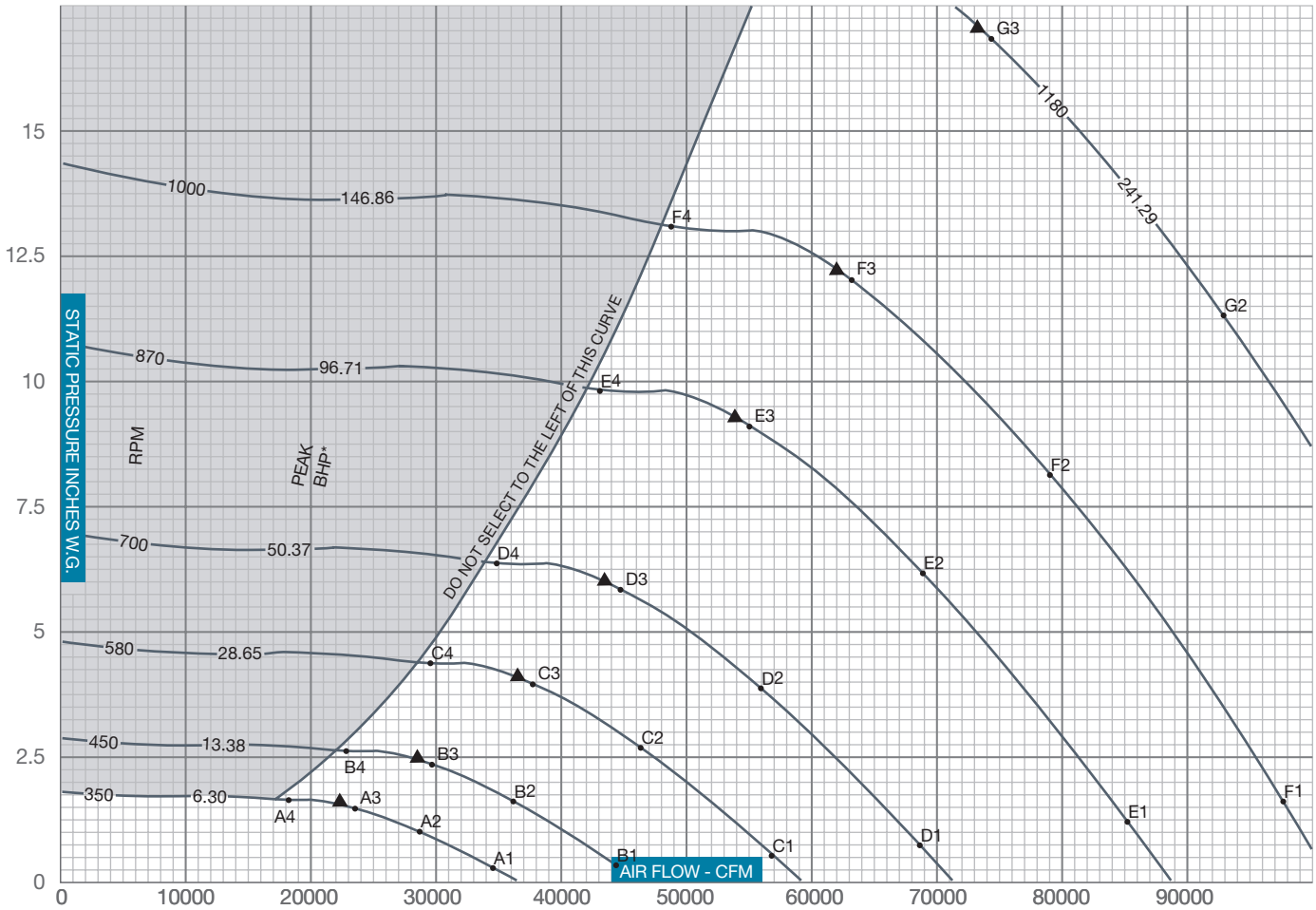

▲ PEAK STATIC EFFICIENCY
* Peak BHP does not include drive losses

$$\% \text{ STATIC EFFICIENCY} = \frac{\text{CFM x SP x .0157}}{\text{BHP}}$$

$$\text{Outlet Velocity (OV) in feet per minute} = \frac{\text{CFM}}{\text{Outlet Area}}$$

SOUND POWER LEVELS x 10^{-12} WATT

The sound power level ratings shown are in decibels, referred to 10^{-12} watts calculated per AMCA Standard 301. Values shown are for inlet L_{wi} sound power levels for installation Type B, free inlet, ducted outlet. Ratings do not include the effects of duct end correction.

FAN RPM	FAN SP	SOUND POINT	BAND / FREQUENCY 1 / 63	2 / 125	3 / 250	4 / 500	5 / 1000	6 / 2000	7 / 4000	8 / 8000
350	0.20	A1	90	83	85	82	74	68	64	67
	1.00	A2	87	79	77	75	68	63	60	63
	1.47	A3	85	78	73	72	67	62	59	62
	1.60	A4	84	78	73	71	66	61	58	61
450	0.33	B1	98	90	90	90	82	75	70	72
	1.64	B2	96	87	83	82	76	70	65	67
	2.43	B3	94	86	80	79	74	69	64	66
	2.64	B4	93	86	79	78	73	68	63	65
580	0.55	C1	103	100	95	96	91	83	77	76
	2.73	C2	102	97	89	88	84	78	73	72
	4.03	C3	101	95	87	84	81	76	71	70
	4.39	C4	101	95	87	84	81	76	71	70
700	0.79	D1	106	107	99	100	97	89	83	79
	3.97	D2	106	104	94	92	90	84	78	75
	5.88	D3	106	102	93	89	87	82	77	74
	6.39	D4	106	101	93	88	86	81	76	73

FAN RPM	FAN SP	SOUND POINT	BAND / FREQUENCY 1 / 63	2 / 125	3 / 250	4 / 500	5 / 1000	6 / 2000	7 / 4000	8 / 8000
870	1.23	E1	110	115	104	105	104	96	89	84
	6.13	E2	111	112	101	97	96	90	84	79
	9.08	E3	112	110	100	94	93	88	83	78
	9.87	E4	112	109	100	93	92	87	83	77
1000	1.62	F1	112	117	109	108	107	101	94	88
	8.10	F2	113	115	106	101	99	94	89	83
	12.00	F3	114	113	105	98	96	92	87	82
	13.04	F4	115	113	105	98	95	91	87	81
1180	2.26	G1	115	120	116	111	111	107	99	93
	11.28	G2	116	119	113	105	103	99	93	88
	16.70	G3	117	118	111	103	100	97	92	87

BCA-660 SINGLE WIDTH

WHEEL DIAMETER: 66.00"
WHEEL CIRCUMFERENCE: 17.28'
OUTLET AREA: 24.10 SQ. FT.
OUTLET SIZE: 52⅜" X 66¼"
INLET DIAMETER: 69¼" O.D.

MAX SPEEDS	CLASS 1	CLASS 2	CLASS 3
Up to 250°F	649	847	1136
251°F to 400°F*	617	804	1078
401°F to 700°F*	532	694	931
Above 700°F	CONTACT FACTORY		

*Special hi-temp construction required
Tip Speed (fpm) = 17.28 x RPM
Max BHP = 236.518 x (RPM/1000)^3

		0.25" SP		0.50" SP		0.75" SP		1.00" SP		1.50" SP		2.00" SP		2.50" SP		3.00" SP		3.50" SP	
CFM	OV	RPM	BHP	RPM	BHP	RPM	BHP	RPM	BHP	RPM	BHP	RPM	BHP	RPM	BHP	RPM	BHP	RPM	BHP
16795	700	160	0.94	191	1.64	220	2.43	252	3.34										
19194	800	174	1.17	202	1.94	228	2.78	254	3.71										
21594	900	188	1.46	215	2.29	238	3.20	260	4.15	309	6.36								
23993	1000	204	1.81	228	2.69	250	3.67	271	4.69	312	6.93	357	9.52						
26392	1100	219	2.22	241	3.15	262	4.19	282	5.29	319	7.61	358	10.23	399	13.15				
28792	1200	235	2.66	256	3.69	275	4.78	294	5.95	329	8.41	362	11.05	400	14.03	437	17.24		
31191	1300	251	3.16	271	4.32	289	5.44	307	6.68	340	9.28	371	12.03	403	15.00	438	18.28	472	21.77
33591	1400	268	3.73	286	5.02	303	6.20	320	7.49	351	10.23	382	13.11	410	16.12	441	19.43	473	22.98
35990	1500	284	4.38	301	5.80	318	7.06	333	8.37	364	11.25	392	14.28	420	17.43	446	20.70	475	24.31
38389	1600	301	5.11	317	6.65	332	8.01	347	9.37	377	12.36	404	15.53	430	18.82	455	22.22	480	25.77
40789	1700	318	5.93	333	7.55	348	9.05	362	10.48	390	13.57	416	16.87	441	20.30	466	23.84	489	27.49
43188	1800	335	6.83	349	8.54	363	10.20	377	11.71	403	14.87	429	18.31	453	21.89	477	25.57	499	29.35
45587	1900	352	7.84	365	9.62	378	11.47	392	13.04	417	16.28	442	19.86	465	23.57	488	27.39	510	31.31
47987	2000	369	8.94	382	10.81	394	12.74	407	14.49	431	17.87	455	21.51	478	25.36	499	29.33	521	33.39
50386	2100	386	10.15	398	12.11	411	14.12	422	16.06	446	19.58	468	23.28	491	27.27	512	31.37	532	35.58

		4.00" SP		4.50" SP		5.00" SP		5.50" SP		6.00" SP		6.50" SP		7.00" SP		7.50" SP		8.00" SP	
CFM	OV	RPM	BHP	RPM	BHP	RPM	BHP	RPM	BHP	RPM	BHP	RPM	BHP	RPM	BHP	RPM	BHP	RPM	BHP
40789	1700	513	31.30	539	35.42	566	39.73	592	44.21	617	48.82								
43188	1800	521	33.22	544	37.29	568	41.65	594	46.18	619	50.87	643	55.73	666	60.66				
45587	1900	531	35.33	552	39.43	573	43.73	597	48.32	620	53.06	645	57.97	668	63.04	690	68.21	712	73.45
47987	2000	542	37.54	562	41.79	581	46.11	602	50.63	624	55.44	646	60.37	669	65.52	692	70.77	713	76.17
50386	2100	553	39.87	572	44.25	591	48.72	610	53.26	629	57.99	650	63.01	671	68.15	693	73.49	715	78.93
52785	2200	564	42.33	583	46.85	602	51.45	620	56.14	638	60.89	656	65.80	676	71.01	696	76.38	716	81.88
55185	2300	576	44.90	594	49.57	613	54.31	631	59.13	648	64.03	665	69.00	682	74.07	701	79.47	720	85.05
57584	2400	588	47.60	605	52.42	624	57.30	641	62.26	658	67.30	675	72.41	691	77.60	707	82.82	725	88.39
59983	2500	601	50.45	618	55.40	635	60.44	652	65.54	669	70.71	685	75.96	701	81.28	717	86.67	732	92.10
62383	2600	614	53.44	631	58.52	647	63.70	663	68.95	680	74.27	696	79.65	712	85.11	727	90.64	742	96.23
64782	2700	627	56.58	644	61.80	660	67.11	675	72.50	691	77.97	707	83.50	723	89.09	738	94.75	753	100.48
67182	2800	640	59.88	656	65.24	672	70.68	688	76.21	703	81.82	718	87.50	734	93.23	749	99.03	763	104.90
69581	2900	653	63.34	670	68.84	685	74.42	701	80.08	715	85.83	730	91.65	744	97.54	759	103.48	774	109.48
71980	3000	666	66.97	683	72.61	698	78.33	713	84.13	728	90.01	742	95.96	756	102.00	770	108.09	785	114.23
74380	3100	680	70.78	696	76.55	711	82.41	726	88.34	741	94.36	755	100.45	769	106.62	782	112.87	796	119.16
76779	3200	694	74.94	709	80.67	725	86.67	739	92.74	754	98.90	768	105.12	781	111.43	794	117.80	807	124.25
79178	3300	709	79.30	723	85.00	738	91.11	753	97.33	767	103.62	781	109.98	794	116.42	807	122.93	820	129.51
81578	3400	724	83.87	737	89.70	751	95.75	766	102.10	780	108.53	793	115.03	807	121.61	820	128.25	832	134.97
83977	3500	739	88.65	752	94.62	765	100.66	779	107.07	793	113.64	807	120.28	820	127.00	833	133.78	845	140.63
86376	3600	754	93.64	767	99.75	780	105.93	793	112.25	806	118.96	820	125.74	833	132.59	846	139.51	858	146.49

		9.00" SP		10.00" SP		11.00" SP		12.00" SP		13.00" SP		14.00" SP		15.00" SP		16.00" SP		17.00" SP	
CFM	OV	RPM	BHP	RPM	BHP	RPM	BHP	RPM	BHP	RPM	BHP	RPM	BHP	RPM	BHP	RPM	BHP	RPM	BHP
59983	2500	766	103.73	802	115.95	839	128.77	875	142.01	909	155.60								
62383	2600	772	107.66	806	120.04	840	132.84	876	146.23	910	160.03	943	174.16	975	188.50				
64782	2700	781	112.13	812	124.27	844	137.27	877	150.66	912	164.59	945	178.94	976	193.59	1007	208.46		
67182	2800	792	116.83	819	128.97	849	141.82	881	155.42	913	169.39	946	183.85	978	198.72	1009	213.90	1038	229.28
69581	2900	802	121.68	829	134.13	856	146.75	886	160.37	916	174.49	947	189.01	979	203.99	1010	219.36	1040	235.06
71980	3000	813	126.70	839	139.42	865	152.37	892	165.63	921	179.83	951	194.46	981	209.52	1012	225.01	1041	240.87
74380	3100	824	131.91	850	144.90	876	158.12	901	171.54	927	185.45	955	200.21	984	215.34	1013	230.91	1043	246.91
76779	3200	834	137.29	861	150.55	886	164.05	910	177.77	935	191.66	961	206.19	988	221.49	1016	237.12	1044	253.18
79178	3300	845	142.86	872	156.40	897	170.17	921	184.16	944	198.37	968	212.71	993	227.85	1020	243.68	1047	259.80
81578	3400	857	148.60	883	162.44	908	176.48	932	190.75	955	205.22	978	219.90	1001	234.70	1026	250.43	1052	266.76
83977	3500	870	154.53	894	168.68	918	183.00	942	197.53	966	212.28	988	227.24	1010	242.37	1032	257.63	1057	273.92
86376	3600	882	160.66	905	175.09	929	189.72	953	204.53	976	219.55	999	234.78	1020	250.20	1042	265.79	1063	281.53
88776	3700	895	167.01	918	181.70	940	196.64	964	211.73	987	227.03	1009	242.53	1031	258.22	1052	274.11	1073	290.14
91175	3800	908	173.57	931	188.53	953	203.75	975	219.15	998	234.73	1020	250.50	1042	266.47	1062	282.63	1083	298.97
93574	3900	921	180.35	943	195.59	965	211.07	986	226.78	1009	242.65	1031	258.69	1052	274.94	1073	291.37	1093	307.98

Performance shown is for installation type B & D - Free or ducted inlet, Ducted outlet. Underlined ratings indicate maximum static efficiency. Power rating (BHP) does not include drive losses. Performance ratings do not include the effects of appurtenances in the airstream.

CLASS 1 | CLASS 2 | CLASS 3

BCA-660 SINGLE WIDTH

CONSTANT SPEED PERFORMANCE CURVES

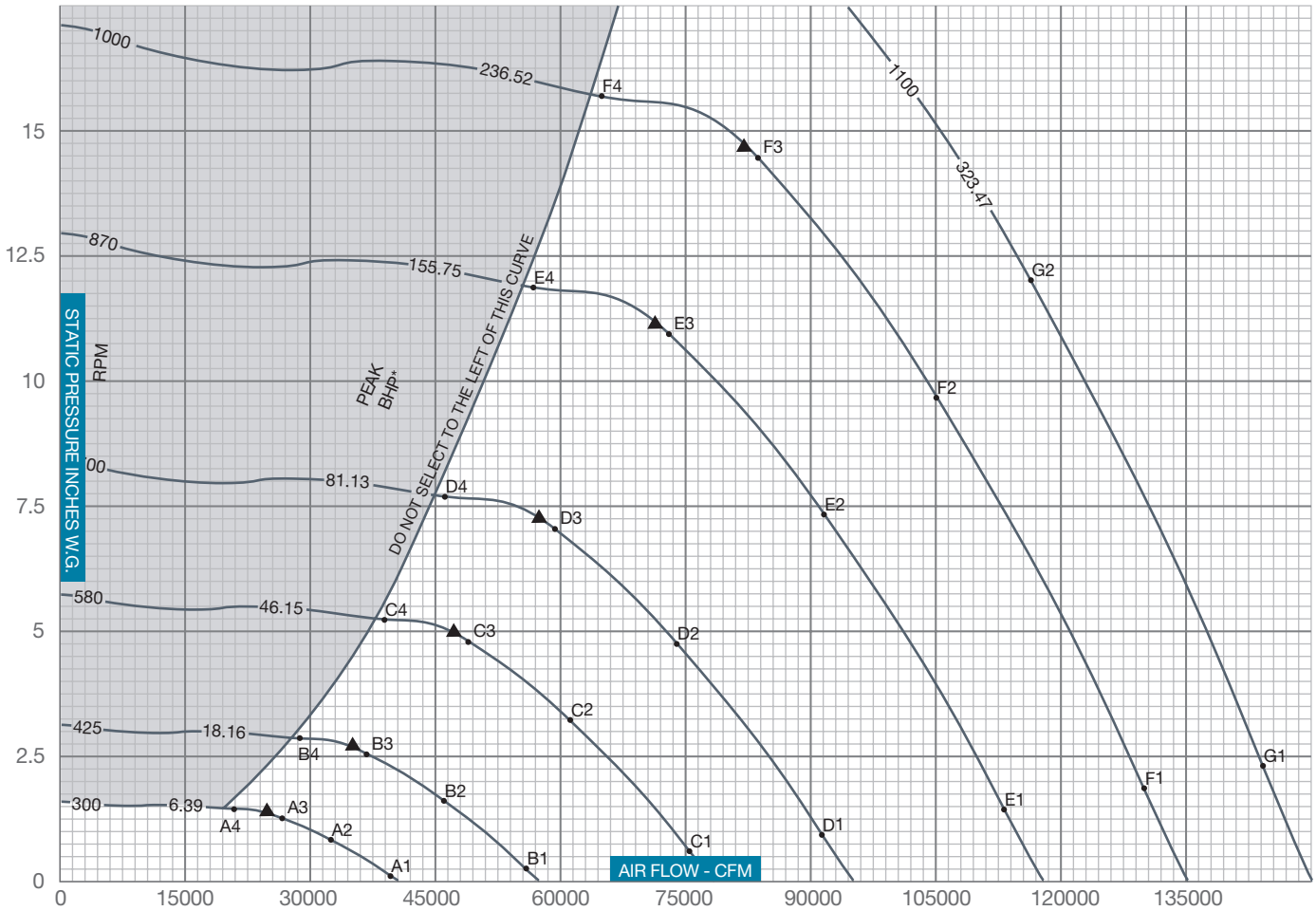

▲ PEAK STATIC EFFICIENCY
* Peak BHP does not include drive losses

$$\%\,\text{STATIC EFFICIENCY} = \frac{\text{CFM x SP x .0157}}{\text{BHP}}$$

$$\text{Outlet Velocity (OV) in feet per minute} = \frac{\text{CFM}}{\text{Outlet Area}}$$

SOUND POWER LEVELS x 10^{-12} WATT

The sound power level ratings shown are in decibels, referred to 10^{-12} watts calculated per AMCA Standard 301. Values shown are for inlet L_{wi} sound power levels for installation Type B, free inlet, ducted outlet. Ratings do not include the effects of duct end correction.

FAN RPM	FAN SP	SOUND POINT	BAND / FREQUENCY 1 / 63	2 / 125	3 / 250	4 / 500	5 / 1000	6 / 2000	7 / 4000	8 / 8000
300	0.18	A1	87	83	84	80	72	66	65	68
	0.88	A2	84	78	76	73	67	61	60	63
	1.31	A3	83	76	73	70	65	60	59	62
	1.42	A4	82	76	72	70	64	60	58	61
425	0.35	B1	101	90	92	92	83	76	71	74
	1.77	B2	98	87	84	83	77	72	66	69
	2.62	B3	95	87	81	80	75	71	65	68
	2.85	B4	94	87	80	80	74	70	65	67
580	0.66	C1	106	103	98	99	94	86	80	79
	3.30	C2	105	100	92	91	87	81	75	75
	4.88	C3	104	98	90	87	84	79	74	73
	5.31	C4	104	98	90	87	84	79	74	73
700	0.96	D1	109	110	101	103	100	92	86	82
	4.80	D2	109	107	97	95	92	86	81	78
	7.11	D3	109	105	96	91	90	85	80	77
	7.73	D4	110	104	96	91	89	84	79	76

FAN RPM	FAN SP	SOUND POINT	BAND / FREQUENCY 1 / 63	2 / 125	3 / 250	4 / 500	5 / 1000	6 / 2000	7 / 4000	8 / 8000
870	1.48	E1	113	118	107	108	107	99	92	87
	7.42	E2	114	115	103	100	99	93	87	82
	11.00	E3	115	113	103	97	96	91	86	81
	11.94	E4	116	112	103	96	95	90	85	80
1000	1.96	F1	115	120	112	110	110	104	96	91
	9.81	F2	116	118	109	104	102	97	91	86
	14.51	F3	117	116	108	101	99	95	90	85
	15.78	F4	118	116	108	101	98	94	89	84
1110	2.42	G1	117	122	116	112	113	108	100	94
	12.08	G2	118	121	113	106	104	100	95	89

BCA/BCS-122-200
ARRANGEMENT 1

ROTATABLE HOUSING

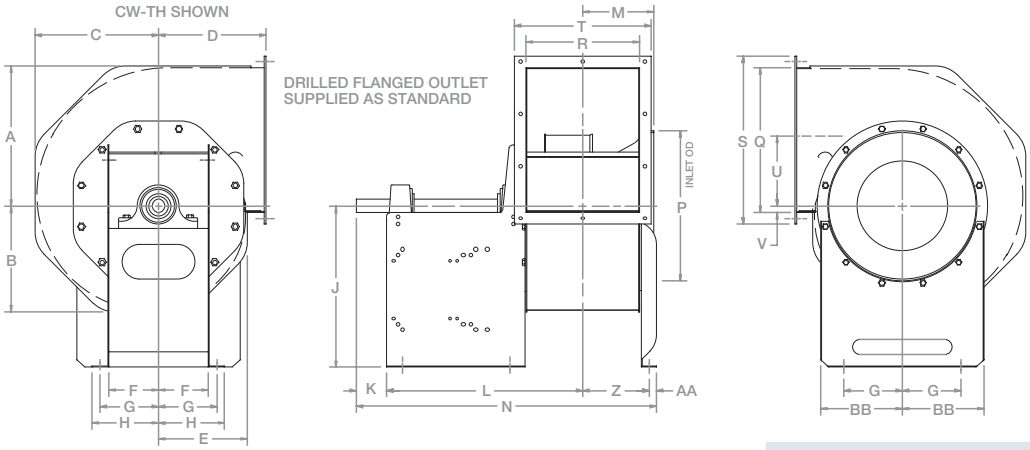

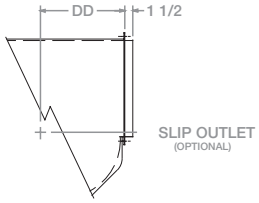

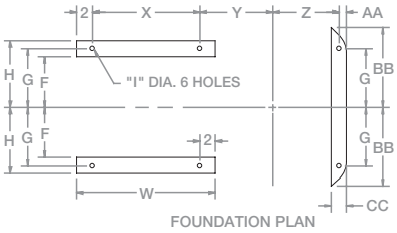

ARR'T 1 BEARING BASES ARE PRE-PUNCHED FOR THE FOLLOWING FRAME SIZE SLIDE BASES		
FAN SIZES	WHEEL SIZES	FRAME SIZES
122	12¼	143, 145, 182, 184
135	13½	143, 145, 182, 184
150	15	143, 145, 182, 184
165	16½	143, 145, 182, 184, 213, 215
182	18¼	143, 145, 182, 184, 213, 215
200	20	182, 184, 213, 215, 254

ALL DIMENSIONS SHOWN IN INCHES
*Fan weight is approximate

																														CLASS 1 & 2			CLASS 3		
FAN SIZE	A	B	C	D	E	F	G	H	I	J	K	L	M	N	P	Q	R	S	T	U	V	W	X	Y	Z	AA	BB	CC	DD	SHAFT DIA	KEY-WAY	FAN WT.* NO MOTOR	SHAFT DIA	KEY-WAY	FAN WT.* NO MOTOR
122	12⅜	9⅜	10⅞	10	7⅞	5½	6⅜	7⅛	7/16	15	3½	18⅛	6 9/16	28 7/16	13⅜	12 5/16	10	15 5/16	13	5 31/32	3/16	13	9	7⅛	6 1/16	¾	9¾	1⅝	8 5/16	1 3/16	¼ x ⅛	104	1 7/16	⅜ x 3/16	127
135	13 9/16	10 5/16	11 15/16	11	8 11/16	5½	6⅜	7⅛	7/16	16	3½	18 19/32	7 1/32	29⅜	14⅜	13 9/16	10 15/16	16 9/16	13 15/16	6 9/16	7/32	13	9	7 19/32	6 17/32	¾	9¾	1⅝	9 5/16	1 3/16	¼ x ⅛	116	1 7/16	⅜ x 3/16	142
150	15 1/16	11 7/16	13¼	12	9⅝	5½	6⅜	7⅛	7/16	18	3½	19 7/32	7 21/32	30 11/16	16½	15⅛	12 3/16	18⅛	15 3/16	7 9/32	9/32	13	9	8 7/32	7 7/32	¾	9¾	1⅝	10 5/16	1 3/16	¼ x ⅛	134	1 7/16	⅜ x 3/16	162
165	16 9/16	12 9/16	14 9/16	13	10 9/16	6½	7⅝	8⅝	9/16	19	4	24 13/16	8¼	37⅞	17½	16⅝	13⅜	19⅝	16⅜	7 31/32	11/32	18	14	8 13/16	8 1/16	1	11½	2⅛	11¼	1 7/16	⅜ x 3/16	209	1 11/16	⅜ x 3/16	253
182	18¼	13 13/16	16 1/16	14	11⅝	6½	7⅝	8⅝	9/16	21	4	25½	9	39 9/16	19½	18⅜	14¾	21⅜	17¾	8 27/32	11/32	18	14	9½	8 13/16	1	11½	2⅛	12¼	1 7/16	⅜ x 3/16	239	1 11/16	⅜ x 3/16	285
200	20	15⅛	17 9/16	15	12 11/16	6½	7⅝	8⅝	9/16	22	4	29 9/16	9 11/16	43 11/16	21½	20⅛	16⅛	23⅛	19⅛	9 11/16	⅜	21	17	10 3/16	9½	1	12⅜	2⅛	13¼	1 7/16	⅜ x 3/16	275	1 15/16	½ x ¼	339

BCA/BCS-222-330
ARRANGEMENT 1

ROTATABLE HOUSING

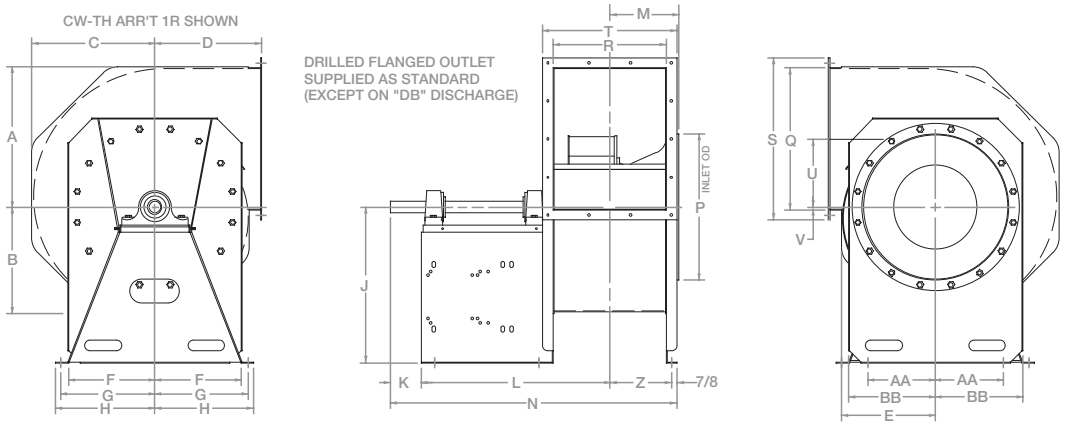

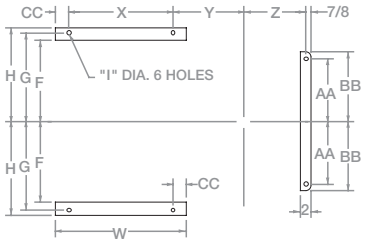

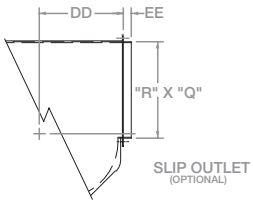

ALL DIMENSIONS SHOWN IN INCHES
*Fan weight is approximate

	CLASS 1 & 2		CLASS 3	
FAN SIZE	SHAFT DIA	KEY-WAY	SHAFT DIA	KEY-WAY
222	1 11/16	⅜ x 3/16	1 15/16	½ x ¼
245	1 11/16	⅜ x 3/16	2 3/16	½ x ¼
270	1 15/16	⅜ x 3/16	2 3/16	½ x ¼
300	1 15/16	½ x ¼	2 7/16	⅝ x 5/16
330	2 3/16	½ x ¼	2 11/16	⅝ x 5/16

ARR'T 1 BEARING BASES ARE PRE-PUNCHED FOR THE FOLLOWING FRAME SIZE SLIDE BASES		
FAN SIZES	WHEEL SIZES	FRAME SIZES
222	22¼	182, 184, 213, 215, 254, 256
245	24½	182, 184, 213, 215, 254, 256
270	27	182, 184, 213, 215, 254, 256, 284
300	30	184, 213, 215, 254, 256, 284, 286
330	33	213, 215, 254, 256, 284, 286, 324

				DISCHARGE																												DISCHARGE					
				TH, UB, DB, BH	TAU, BAU	TAD																										TH, UB, BH	TAU, BAU	TAD		CLASS 1 & 2	CLASS 3
FAN SIZE	A	B	C	D	D	D	E	F	G	H	I	J	K	L	M	N	P	Q	R	S	T	U	V	W	X	Y	Z	AA	BB	CC	DD	DD	DD	EE	FAN WT.* NO MOTOR	FAN WT.* NO MOTOR
222	22¼	16 13/16	19½	16	20½	23¾	14⅛	13½	15	16	1 1/16	25	5	32 3/32	10 23/32	48 1/16	23½	22⅜	17 15/16	25⅜	20 15/16	10 25/32	13/32	23	19	11 3/32	10 3/32	10	13⅝	2	14⅜	18⅞	22⅛	1⅜	393	448
245	24 7/16	18½	21½	18	22½	26¾	15½	15½	17	18	1 1/16	27	5	32 31/32	12 3/32	49 13/16	26½	24 11/16	19 11/16	28 11/16	23 11/16	11⅞	15/32	23	19	11 31/32	10 31/32	12	15½	2	15¾	20½	24¾	2	468	546
270	26 15/16	20⅜	23⅝	19½	24	28¼	17 1/16	16½	18	19	1 3/16	30	6	36 1/32	13 5/32	54⅞	28½	27 3/16	21 11/16	31 3/16	25 11/16	13 1/16	17/32	25	20	13 17/32	11 31/32	13	16 11/16	2½	17 5/16	22 1/16	26 5/16	1 15/16	616	702
300	29⅞	22⅝	26¼	22	26	30½	18 15/16	18	19½	20½	1 3/16	33	6	37 7/32	14 11/32	57¼	31½	30 3/16	24 1/16	34 3/16	28 1/16	14 17/32	9/16	25	20	14 23/32	13 5/32	14½	18 3/16	2½	19¾	24	28½	2	763	870
330	32 13/16	24 13/16	28 13/16	24	28¾	33¾	20 13/16	19½	21	22	1 3/16	36	6½	40 7/16	15 19/32	62 3/16	34½	33¼	26 9/16	37¼	30 9/16	15 31/32	21/32	27	22	15 15/16	14⅜	16	19 11/16	2½	21¾	26¾	31¾	2	913	1027

BCA/BCS-365-660 ARRANGEMENT 1

FIXED HOUSING

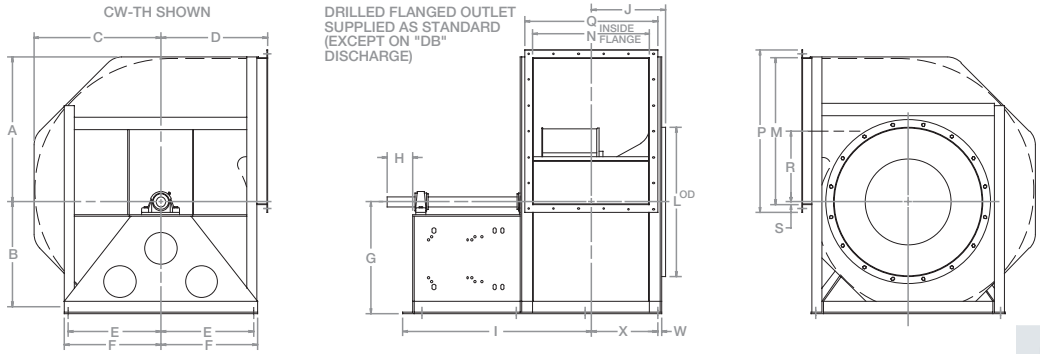

ALL DIMENSIONS SHOWN IN INCHES

FAN SIZE	Y	DISCHARGE ALL EXCEPT TAD Z	DISCHARGE TAD Z
365	2	24¾	39 13/16
402	2	27¾	43
445	2	30¾	45⅝
490	3	32¾	52 15/16
542	3	36¾	56⅝
600	4	40	66½
660	4	44¾	70⅝

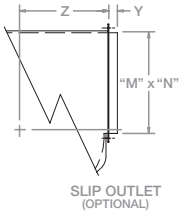

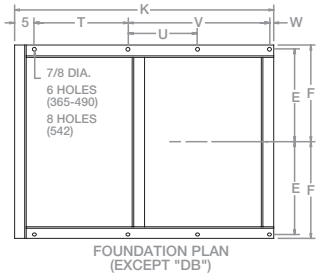

FAN SIZE	APPROX. FAN WEIGHT LESS MOTOR (LBS.) CLASS 1 & 2	CLASS 3
365	1400	1645
402	1710	1950
445	1940	2235
490	2520	2900
542	2910	3410
600	3700	4347
660	4690	5400

ARR'T 1 BEARING BASES ARE PRE-PUNCHED FOR THE FOLLOWING FRAME SIZE SLIDE BASES		
FAN SIZES	WHEEL SIZES	FRAME SIZES
365	36½	213, 215, 254, 256, 284, 286, 324, 326
402	40¼	254, 256, 284, 286, 324, 326, 364
445	44½	254, 256, 284, 286, 324, 326, 364
490	49	284, 286, 324, 326, 364, 365, 404, 405
542	54¼	284, 286, 324, 326, 364, 365, 404, 405
600	60	284, 286, 324, 326, 364, 365, 404, 405
660	66	284, 286, 324, 326, 364, 365, 404, 405

FAN SIZE	A	B	C	D (DISCHARGE ALL EXCEPT TAD)	D (DISCHARGE TAD)	E	F	G (TH)	G (TAU)	G (UB)	G (BAU)	G (BH)	G (DB)	G (TAD)	H	I	J	K	L	M	N	P	Q	R	S	T	U	V	W	X	CLASS 1 & 2 SHAFT DIA	CLASS 1 & 2 KEY-WAY	CLASS 3 SHAFT DIA	CLASS 3 KEY-WAY	MAX FRAME SIZE
365	36 5/16	27 7/16	31⅞	27	42 1/16	23¼	24¼	28	30	33	35	40	27	33	6½	47 5/16	16 13/16	65	37½	36¾	29¼	40¾	33¼	17 11/16	1 1/16	23½	–	35½	1	16 11/16	2 7/16	⅝ x 5/16	2 11/16	⅝ x 5/16	326T
402	40	30¼	35⅛	30	45¼	25¼	26¼	31	33	36	38	43	30	35	7	49 25/32	18 9/32	68 15/16	41½	40 9/16	32 3/16	44 9/16	36 3/16	19 15/32	1 3/16	24½	–	38 7/16	1	18 5/32	2 11/16	⅝ x 5/16	2 15/16	¾ x ⅜	364T
445	44 7/32	33 13/32	38 25/32	33	47⅞	27	28¼	34	37	40	42	47	33	37	7	51 15/32	19 31/32	72 5/16	45½	44 13/16	35 9/16	48 13/16	39 9/16	21 9/16	27/32	24½	–	41 9/16	1¼	19 19/32	2 11/16	⅝ x 5/16	2 15/16	¾ x ⅜	364T
490	48 21/32	36¾	42 11/16	36	56 3/16	31¼	32½	37	40	43	46	54	36	44	8	56¼	22¾	78⅞	51½	49 9/16	39⅛	55 9/16	45⅛	23¾	29/32	27½	–	45⅛	1¼	21⅜	2 15/16	¾ x ⅜	3 7/16	⅞ x 7/16	405T
542	53 13/16	40 21/32	47¼	40	59⅞	33¾	35	41	45	48	51	59	40	47	8	58 11/32	24 27/32	83 1/16	56¾	54⅝	43 5/16	60⅝	49 5/16	26¼	1 1/16	27½	24 21/32	49 5/16	1¼	23 15/32	3 3/16	¾ x ⅜	3 11/16	⅞ x 7/16	405T
600	59½	44 15/16	52 7/32	44	70½	37¾	39	46	49	53	57	65	44	56	8	62⅝	28⅛	89⅝	63¼	60 7/16	47⅞	68 7/16	55⅞	29 1/32	1 3/16	27⅞	27⅝	55½	1¼	25¾	3 7/16	¾ x ⅜	4 7/16	1 x ½	405T
660	65 7/16	49 13/32	57 13/32	48¾	74⅝	40¾	42	50	54	58	62	71	49	59	8	65	30½	94⅜	69¼	66½	52⅝	74½	60⅝	32 1/16	1 3/16	29⅜	29⅜	58¾	1¼	28⅛	3 15/16	⅞ x 7/16	4 7/16	1 x ½	405T

BCA/BCS-122-200 ARRANGEMENT 9

ROTATABLE HOUSING

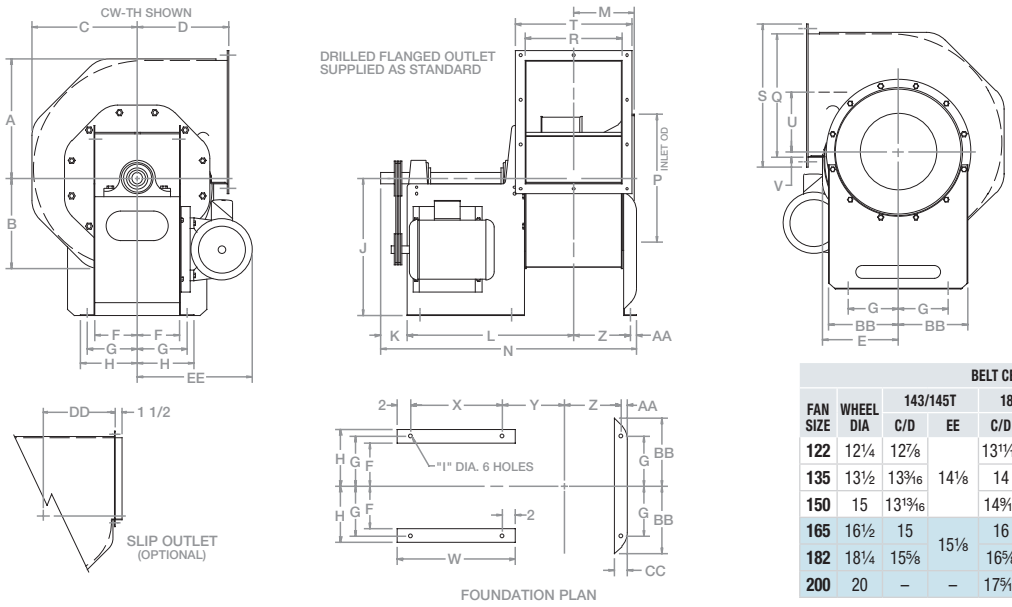

ALL DIMENSIONS SHOWN IN INCHES

FAN SIZE	WHEEL DIA	BELT CENTER DISTANCE 143/145T C/D	143/145T EE	182/184T C/D	182/184T EE	213/215T C/D	213/215T EE	254T C/D	254T EE
122	12¼	12⅞	14⅛	13 11/16	16¼	–	–	–	–
135	13½	13 3/16		14					
150	15	13 13/16		14 9/16					
165	16½	15	15⅛	16	17¼	16 13/16	19⅛	–	–
182	18¼	15⅝		16⅝		17 7/16			
200	20	–	–	17 5/16		18 1/16		19	21⅛

FRAME SIZE	APPROX. MOTOR & SLIDE BASE WT. WEIGHT LBS.
143T	50
145T	58
182T	94
184T	110
213T	164
215T	186
254T	279

FAN SIZE	A	B	C	D	E	F	G	H	I	J	K	L	M	N	P	Q	R	S	T	U	V	W	X	Y	Z	AA	BB	CC	DD	CLASS 1 & 2 SHAFT DIA	CLASS 1 & 2 KEY-WAY	CLASS 1 & 2 FAN WT.* NO MOTOR	CLASS 3 SHAFT DIA	CLASS 3 KEY-WAY	CLASS 3 FAN WT.* NO MOTOR
122	12⅜	9⅜	10⅞	10	7⅞	5½	6⅜	7⅛	7/16	15	3½	18⅛	6 9/16	28 7/16	13⅜	12 5/16	10	15 5/16	13	5 31/32	3/16	13	9	7⅛	6 1/16	¾	9¾	1⅝	8 5/16	1 3/16	¼ x ⅛	104	1 7/16	⅜ x 3/16	127
135	13 9/16	10 5/16	11 15/16	11	8 11/16	5½	6⅜	7⅛	7/16	16	3½	18 19/32	7 1/32	29⅜	14⅜	13 9/16	10 15/16	16 9/16	13 15/16	6 9/16	7/32	13	9	7 19/32	6 17/32	¾	9¾	1⅝	9 5/16	1 3/16	¼ x ⅛	116	1 7/16	⅜ x 3/16	142
150	15 1/16	11 7/16	13¼	12	9⅝	5½	6⅜	7⅛	7/16	18	3½	19 7/32	7 21/32	30 11/16	16½	15⅛	12 3/16	18⅛	15 3/16	7 9/32	9/32	13	9	8 7/32	7 7/32	¾	9¾	1⅝	10 5/16	1 3/16	¼ x ⅛	134	1 7/16	⅜ x 3/16	162
165	16 9/16	12 9/16	14 9/16	13	10 9/16	6½	7⅝	8⅝	9/16	19	4	24 13/16	8¼	37⅞	17½	16⅝	13⅜	19⅝	16⅜	7 31/32	11/32	18	14	8 13/16	8 1/16	1	11½	2⅛	11¼	1 7/16	⅜ x 3/16	209	1 11/16	⅜ x 3/16	253
182	18¼	13 13/16	16 1/16	14	11⅝	6½	7⅝	8⅝	9/16	21	4	25½	9	39 5/16	19½	18⅜	14¾	21⅜	17¾	8 27/32	11/32	18	14	9½	8 13/16	1	11½	2⅛	12¼	1 7/16	⅜ x 3/16	239	1 11/16	⅜ x 3/16	285
200	20	15⅛	17 9/16	15	12 11/16	6½	7⅝	8⅝	9/16	22	4	29 3/16	9 11/16	43 11/16	21½	20⅛	16⅛	23⅛	19⅛	9 11/16	⅜	21	17	10 3/16	9½	1	12⅜	2⅛	13¼	1 7/16	⅜ x 3/16	275	1 15/16	½ x ¼	339

BCA/BCS-222-330
ARRANGEMENT 9

ROTATABLE HOUSING

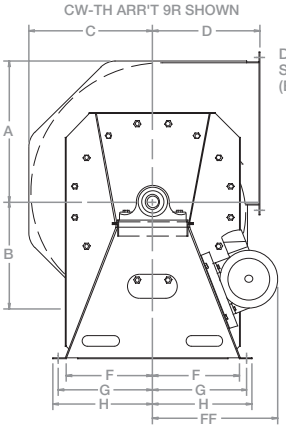

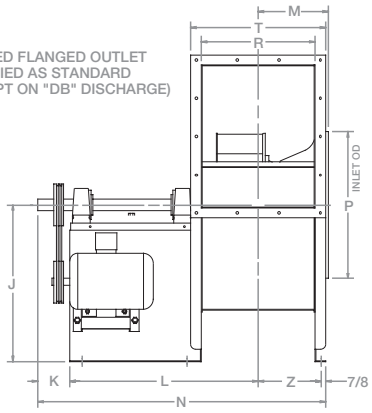

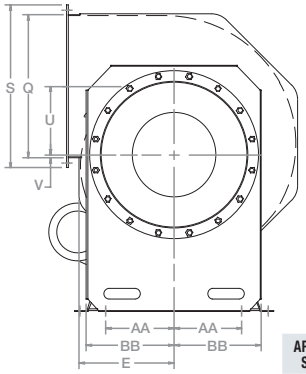

ALL DIMENSIONS SHOWN IN INCHES
*Fan weight is approximate

	CLASS 1 & 2		CLASS 3	
FAN SIZE	SHAFT DIA	KEY-WAY	SHAFT DIA	KEY-WAY
222	1 11/16	3/8 x 3/16	1 15/16	1/2 x 1/4
245	1 11/16	3/8 x 3/16	2 3/16	1/2 x 1/4
270	1 11/16	3/8 x 3/16	2 3/16	1/2 x 1/4
300	1 15/16	1/2 x 1/4	2 7/16	5/8 x 5/16
330	2 3/16	1/2 x 1/4	2 11/16	5/8 x 5/16

BELT CENTER DISTANCE											
FAN SIZE	WHEEL DIA	182/184T		213/215T		254/256T		284/286T		324T	
		C/D	FF	C/D	FF	C/D	FF	C/D	FF	C/D	FF
222	22 1/4	20.0	20 3/16	21.3	22	21.3	24	–	–	–	–
245	24 1/2	21.6	21 1/2	22.8	23 1/4	22.8	25 1/4	–	–	–	–
270	27	23.0	22 1/16	24.2	23 7/8	24.2	25 13/16	**24.6	**27 7/16	–	–
300	30	24.8	23 1/16	25.9	24 7/8	25.9	26 13/16	26.3	27 1/2	–	–
330	33	–	–	27.8	25 7/8	27.8	27 13/16	28.2	29 1/2	29.0	32 1/16

**284T ONLY

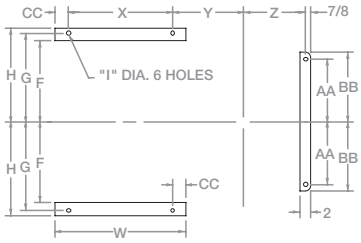

FOUNDATION PLAN

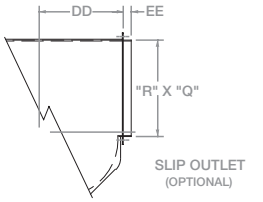

SLIP OUTLET
(OPTIONAL)

APPROX. MOTOR & SLIDE BASE WT.	
FRAME SIZE	WEIGHT LBS.
182T	94
184T	110
213T	164
215T	186
254T	279
256T	310
284T	412
286T	463
324T	587

FAN SIZE	A	B	C	D	DISCHARGE TH, UB, DB, BH D	DISCHARGE TAU, BAU D	DISCHARGE TAD D	E	F	G	H	I	J	K	L	M	N	P	Q	R	S	T	U	V	W	X	Y	Z	AA	BB	CC	DD	DISCHARGE TH, UB, BH DD	DISCHARGE TAU, BAU DD	DISCHARGE TAD DD	EE	CLASS 1 & 2 FAN WT.* NO MOTOR	CLASS 3 FAN WT.* NO MOTOR
222	22 1/4	16 13/16	19 1/2	16	20 1/2	23 3/4	14 1/8	13 1/2	15	16	1 1/16	25	5	32 3/32	10 23/32	48 1/16	23 1/2	22 3/8	17 15/16	25 3/8	20 15/16	10 25/32	13/32	23	19	11 3/32	10 3/32	10	13 5/8	2	14 3/8	18 7/8	22 1/8	1 3/8	393	448
245	24 7/16	18 1/2	21 1/2	18	22 1/2	26 3/4	15 1/2	15 1/2	17	18	1 1/16	27	5	32 31/32	12 9/32	49 13/16	26 1/2	24 11/16	19 11/16	28 11/16	23 11/16	11 7/8	15/32	23	19	11 31/32	10 31/32	12	15 1/2	2	15 3/4	20 1/2	24 3/4	2	468	546
270	26 15/16	20 3/8	23 5/8	19 1/2	24	28 1/4	17 1/16	16 1/2	18	19	13/16	30	6	36 1/32	13 5/32	54 7/8	28 1/2	27 3/16	21 11/16	31 3/16	25 11/16	13 1/16	17/32	25	20	13 17/32	11 31/32	13	16 11/16	2 1/2	17 5/16	22 1/16	26 5/16	1 15/16	616	702
300	29 7/8	22 5/8	26 1/4	22	26	30 1/2	18 15/16	18	19 1/2	20 1/2	13/16	33	6	37 7/32	14 11/32	57 1/4	31 1/2	30 3/16	24 1/16	34 3/16	28 1/16	14 17/32	9/16	25	20	14 23/32	13 5/32	14 1/2	18 3/16	2 1/2	19 3/4	24	28 1/2	2	763	870
330	32 13/16	24 13/16	28 13/16	24	28 3/4	33 3/4	20 13/16	19 1/2	21	22	13/16	36	6 1/2	40 7/16	15 9/16	62 3/16	34 1/2	33 1/2	26 9/16	37 1/4	30 9/16	15 31/32	21/32	27	22	15 15/16	14 3/8	16	19 11/16	2 1/2	21 3/4	26 3/4	31 3/4	2	913	1027

BCA/BCS-365-660
ARRANGEMENT 9

FIXED HOUSING

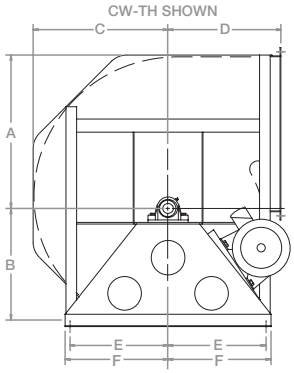

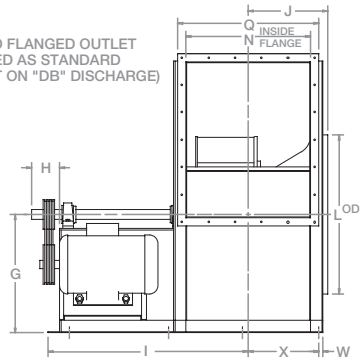

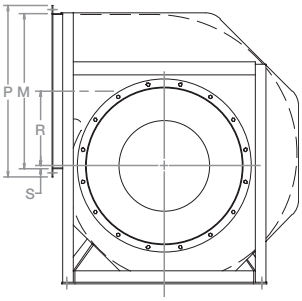

ALL DIMENSIONS SHOWN IN INCHES

FAN SIZE	Y	DISCHARGE ALL EXCEPT TAD Z	DISCHARGE TAD Z
365	2	24 3/4	39 13/16
402	2	27 3/4	43
445	2	30 3/4	45 5/8
490	3	32 3/4	52 15/16
542	3	36 3/4	56 5/8
600	4	40	66 1/2
660	4	44 3/4	70 5/8

APPROXIMATE FAN WEIGHT LESS MOTOR (LBS.)		
FAN SIZE	CLASS 1 & 2	CLASS 3
365	1400	1645
402	1710	1950
445	1940	2235
490	2520	2900
542	2910	3410
600	3700	4347
660	4690	5400

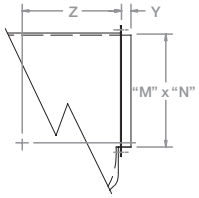

SLIP OUTLET
(OPTIONAL)

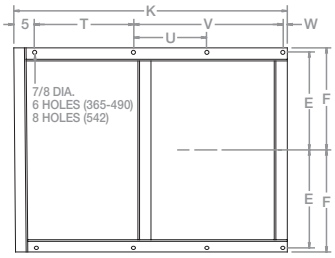

FOUNDATION PLAN
(EXCEPT "DB")

APPROXIMATE MOTOR & SLIDE BASE WEIGHT			
FRAME SIZE	WEIGHT LBS	FRAME SIZE	WEIGHT LBS
312T	164	324T	587
215T	186	326T	653
254T	279	364T	794
256T	310	365T	855
284T	412	404T	1112
286T	463	405T	1213

FAN SIZE	A	B	C	D	DISCHARGE ALL EXCEPT TAD D	DISCHARGE TAD D	E	F	G	TH G	TAU G	UB G	BAU G	BH G	DB G	TAD G	H	I	J	K	L	M	N	P	Q	R	S	T	U	V	W	X	CLASS 1 & 2 SHAFT DIA	CLASS 1 & 2 KEY-WAY	CLASS 3 SHAFT DIA	CLASS 3 KEY-WAY	MAX FRAME SIZE
365	36 5/16	27 7/16	31 7/8	27	42 1/16	23 1/4	24 1/4	28	30	33	35	40	27	33	6 1/2	47 5/16	16 13/16	65	37 1/2	36 3/4	29 1/4	40 3/4	33 1/4	17 11/16	1 1/16	23 1/2	–	35 1/2	1	16 11/16	2 7/16	5/8 x 5/16	2 11/16	5/8 x 5/16	326T
402	40	30 1/4	35 1/8	30	45 1/4	25 1/4	26 1/4	31	33	36	38	43	30	35	7	49 25/32	18 9/32	68 15/16	41 1/2	40 9/16	32 3/16	44 9/16	36 3/16	19 15/32	1 3/16	24 1/2	–	38 7/16	1	18 5/32	2 11/16	5/8 x 5/16	2 15/16	3/4 x 3/8	364T
445	44 7/32	33 13/32	38 25/32	33	47 7/8	27	28 1/4	34	37	40	42	47	33	37	7	51 15/32	19 31/32	72 5/16	45 1/2	44 13/16	35 9/16	48 13/16	39 9/16	21 9/16	27/32	24 1/2	–	41 9/16	1 1/4	19 19/32	2 11/16	5/8 x 5/16	2 15/16	3/4 x 3/8	364T
490	48 21/32	36 3/4	42 11/16	36	56 3/16	31 1/4	32 1/2	37	40	43	46	54	36	44	8	56 1/4	22 3/4	78 7/8	51 1/2	49 5/16	39 1/8	55 5/16	45 1/8	23 3/4	29/32	27 1/2	–	45 1/8	1 1/4	21 3/8	2 15/16	3/4 x 3/8	3 7/16	7/8 x 7/16	405T
542	53 13/16	40 21/32	47 1/4	40	59 7/8	33 3/4	35	41	45	48	51	59	40	47	8	58 11/32	24 27/32	83 1/16	56 3/4	54 5/8	43 5/16	60 5/8	49 5/16	26 1/4	1 1/16	27 1/2	24 21/32	49 5/16	1 1/4	23 15/32	3 9/16	3/4 x 3/8	3 11/16	7/8 x 7/16	405T
600	59 1/2	44 15/16	52 7/32	44	70 1/2	37 3/4	39	46	49	53	57	65	44	56	8	62 5/8	28 1/8	89 5/8	63 1/4	60 7/16	47 7/8	68 7/16	55 7/8	29 1/32	1 3/16	27 7/8	27 5/8	55 1/2	1 1/4	25 3/4	3 7/16	7/8 x 7/16	4 7/16	1 x 1/2	405T
660	65 7/16	49 13/32	57 13/32	48 3/4	74 5/8	40 3/4	42	50	54	58	62	71	49	59	8	65	30 1/2	94 3/8	69 1/4	66 1/2	52 5/8	74 1/2	60 5/8	32 1/16	1 3/16	29 3/8	29 3/8	58 3/4	1 1/4	28 1/8	3 15/16	1 x 1/2	4 7/16	1 x 1/2	405T

BCA/BCS-122-200
ARRANGEMENT 4
ROTATABLE HOUSING

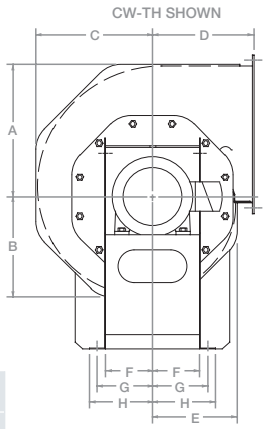

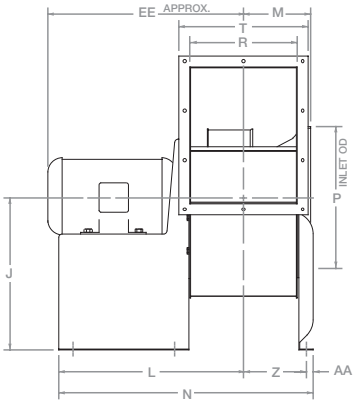

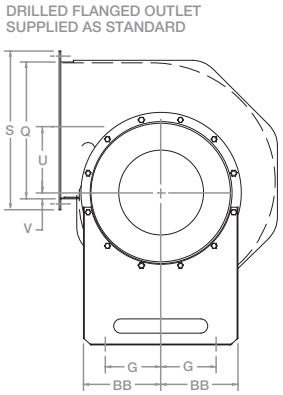

APPROX. MOTOR WEIGHT	
FRAME SIZE	WEIGHT LBS.
143T	45
145T	52
182T	85
184T	100
213T	150
215T	170
254T	260
256T	290

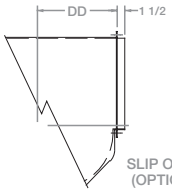

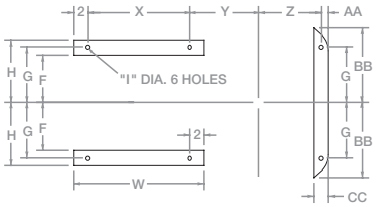

ALL DIMENSIONS SHOWN IN INCHES

APPROX. FAN WEIGHTS LESS MOTOR								
	143/145T		182/184T		213/215T		254/256T	
FAN SIZE	CLASS		CLASS		CLASS		CLASS	
	1 & 2	3 & 4	1 & 2	3 & 4	1 & 2	3 & 4	1 & 2	3 & 4
122	103	126	102	125	101	124	–	–
135	115	141	114	140	113	139		
150	133	161	132	160	131	159		
165	208	252	206	250	205	249	203	247
182	235	281	233	279	232	278	231	277
200	264	328	262	326	261	325	259	323

FAN SIZE	WHEEL DIA	A	B	C	D	E	F	G	H	I	J	L	M	N	P	Q	R	S	T	U	V	W	X	Y	Z	AA	BB	CC	DD	EE 143T	EE 145T	EE 182T	EE 184T	EE 213T	EE 215T	EE 254T	EE 256T
122	12¼	12⅜	9⅜	10⅞	10	7⅞	5½	6⅜	7⅛	7⁄16	15	18⅛	6 9⁄16	24 15⁄16	13⅜	12 5⁄16	10	15 5⁄16	13	5 31⁄32	3⁄16	13	9	7⅛	6 1⁄16	¾	9¾	1⅝	8 5⁄16	14 15⁄16	15 7⁄16	16¾	17¼	19⅝	20 7⁄16	–	–
135	13½	13 9⁄16	10 5⁄16	11 15⁄16	11	8 11⁄16	5½	6⅜	7⅛	7⁄16	16	18 19⁄32	7 1⁄32	25⅞	16½	13 9⁄16	10 15⁄16	16 9⁄16	13 15⁄16	6 9⁄16	7⁄32	13	9	7 19⁄32	6 17⁄32	¾	9¾	1⅝	9 5⁄16	15⅜	15 15⁄16	17¼	17¾	20⅛	20 15⁄16	–	–
150	15	15 1⁄16	11 7⁄16	13¼	12	9⅝	5½	6⅜	7⅛	7⁄16	18	19 7⁄32	7 21⁄32	27 3⁄16	14⅜	15⅛	12 3⁄16	18⅛	15 3⁄16	7 9⁄32	9⁄32	13	9	8 7⁄32	7 7⁄32	¾	9¾	1⅝	10 5⁄16	16	16 9⁄16	17⅞	18⅜	20¾	21 9⁄16	–	–
165	16½	16 9⁄16	12 9⁄16	14 9⁄16	13	10 9⁄16	6½	7⅝	8⅝	9⁄16	19	23 13⁄16	8¼	32⅞	17½	16⅝	13⅜	19⅝	16⅜	7 31⁄32	1⁄32	17	13	8 13⁄16	8 1⁄16	1	11½	2⅛	11¼	16⅝	17 3⁄16	18½	19	21⅜	22 3⁄16	25⅝	26½
182	18¼	18¼	13 13⁄16	16 1⁄16	14	11⅝	6½	7⅝	8⅝	9⁄16	21	24½	9	34 5⁄16	19½	18⅜	14¾	21⅜	17¾	8 27⁄32	1⁄32	17	13	9½	8 13⁄16	1	11½	2⅛	12¼	17 5⁄16	17⅞	19 3⁄16	19 11⁄16	22 1⁄16	22⅞	26 5⁄16	27 3⁄16
200	20	20	15⅛	17 9⁄16	15	12 11⁄16	6½	7⅝	8⅝	9⁄16	22	25 3⁄16	9 11⁄16	35 11⁄16	21½	20⅛	16⅛	23⅛	19⅛	9 11⁄16	⅜	17	13	10 3⁄16	9½	1	12⅜	2⅛	13¼	18	18 9⁄16	19⅞	20⅜	22¾	23 9⁄16	27	27⅞

BCA/BCS-222-330
ARRANGEMENT 4
ROTATABLE HOUSING

APPROX. TEFC MOTOR WEIGHT & RELATED DIMENSIONS				
FRAME SIZE	WEIGHT LBS.	N	W	X
182T	75	11⅞	10⅞	6
184T	100	12⅞		
213T	150	14¾	12⅞	8
215T	175	16¼		
254T	240	19	16⅞	12
256T	300	20¾		
284T	403	22¼	18⅞	14
286T	420	23¾		
324T	553	24¾	20⅞	16
326T	627	26¼		
364T	726	27¼	21⅞	17
365T	836	28¼		
404T	1122	32½	24⅞	20
405T	1300	34		
444T	1727	38½	27 13⁄16	23
445T	1846	40½		

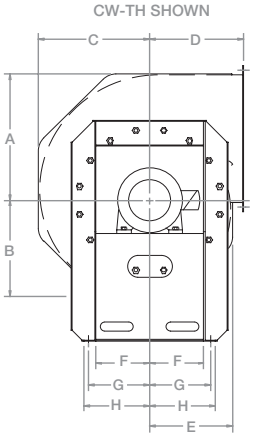

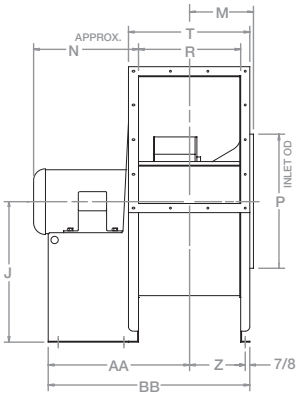

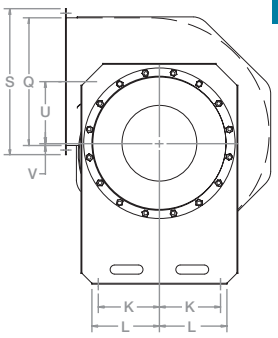

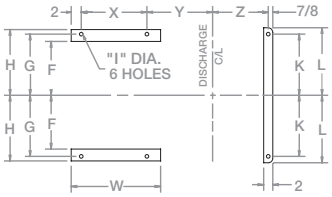

DRILLED FLANGED OUTLET
SUPPLIED AS STANDARD

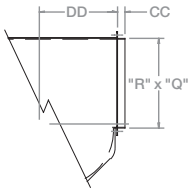

APPROX. FAN WEIGHTS LESS MOTOR															
	182/184T		213/215T		254/256T		284/286T		324/326T		364/365T		404/405T		444/445T	
FAN SIZE	CLASS		CLASS		CLASS		CLASS		CLASS		CLASS		CLASS		CLASS	
	1 & 2	3	1 & 2	3	1 & 2	3	1 & 2	3	1 & 2	3	1 & 2	3	1 & 2	3	1 & 2	3
222	347	372	351	376	362	387	364	389	366	391	N/A		N/A		N/A	
234	429	462	435	468	447	480	449	482	453	486	453	486	N/A		N/A	
270	537	578	570	611	588	629	592	633	598	639	598	639	609	650	N/A	
300	N/A		707	760	727	780	726	779	739	792	740	793	751	804	761	814
330	N/A		889	996	910	1017	917	1024	924	1031	925	1032	938	1045	949	1056

ALL DIMENSIONS SHOWN IN INCHES

FAN SIZE	CC	TH, UB, BH DD	TAU, BAU DD	TAD DD
222	1⅜	14⅜	18⅞	22⅛
245	2	15¾	20½	24¾
270	1 15⁄16	17 5⁄16	22 1⁄16	26 5⁄16
300	2	19¾	24	28½
330	2	21¾	26¾	31¾

FAN SIZE	A	B	C	D	TH, UB D	TAU, BAU D	TAD D	E	F	G	H	I	J	K	L	M	P	Q	R	S	T	U	V	Y	Z	182/184T AA	182/184T BB	213/215T AA	213/215T BB	254/256T AA	254/256T BB	284/286T AA	284/286T BB	324/326T AA	324/326T BB	364/365T AA	364/365T BB	404/405T AA	404/405T BB	444/445T AA	444/445T BB
222	22¼	16 13⁄16	19½	16	20½	23¾	14⅛	8	10	11	1 1⁄16	25	10	32	10 23⁄32	23½	22⅜	17 15⁄16	25⅜	20 15⁄16	10 25⁄32	13⁄32	11 13⁄32	10 9⁄32	19 31⁄32	30 15⁄16	21 31⁄32	32 15⁄16	25 31⁄32	36 15⁄16	27 31⁄32	38 15⁄16	29 31⁄32	40 15⁄16	N/A		N/A		N/A	
245	24 7⁄16	18½	21½	18	22½	26¾	15½	10½	12	13	1 1⁄16	27	12	32 31⁄32	12 3⁄32	26½	24 11⁄16	19 11⁄16	28 11⁄16	23 11⁄16	11⅞	15⁄32	12 27⁄32	10 31⁄32	20 27⁄32	32 11⁄16	22 27⁄32	34 11⁄16	26 27⁄32	38 11⁄16	28 27⁄32	40 11⁄16	30 27⁄32	42 11⁄16	31 27⁄32	43 11⁄16	N/A		N/A		N/A	
270	26 15⁄16	20⅜	23⅝	19½	24	28¼	17 1⁄16	11½	13	14	1 3⁄16	30	13	36 1⁄32	13 5⁄32	28½	27 3⁄16	21 11⁄16	31 3⁄16	25 11⁄16	13 1⁄16	17⁄32	13 27⁄32	11 31⁄32	21 27⁄32	34 11⁄16	23 27⁄32	36 11⁄16	27 27⁄32	40 11⁄16	29 27⁄32	42 11⁄16	31 27⁄32	44 11⁄16	32 27⁄32	45 11⁄16	35 27⁄32	48 11⁄16	N/A			
300	29⅞	22⅝	26¼	22	26	30½	18 5⁄16	12½	14	15	1 3⁄16	33	14½	37 7⁄32	14 11⁄32	31½	30 3⁄16	24 1⁄16	34 3⁄16	28 1⁄16	14 17⁄32	9⁄16	15 1⁄32	13 5⁄32	N/A		25 1⁄32	39 1⁄16	29 1⁄32	43 1⁄16	31 1⁄32	45 1⁄16	33 1⁄32	47 1⁄16	34 1⁄32	48 1⁄16	37 1⁄32	51 1⁄16	40 1⁄32	54 1⁄16		
330	32 13⁄16	24 13⁄16	28 13⁄16	24	28¾	33¾	20 13⁄16	12½	14	15	1 3⁄16	36	16	40 7⁄16	15 9⁄16	34½	33¼	26 9⁄16	37¼	30 9⁄16	15 31⁄32	21⁄32	16 9⁄32	14⅜	N/A		26 9⁄32	41 17⁄32	30 9⁄32	45 17⁄32	32 9⁄32	47 17⁄32	34 9⁄32	49 17⁄32	35 9⁄32	50 17⁄32	38 9⁄32	53 17⁄32	41 9⁄32	56 17⁄32		

BCA/BCS-122-200
ARRANGEMENT 8

ROTATABLE HOUSING

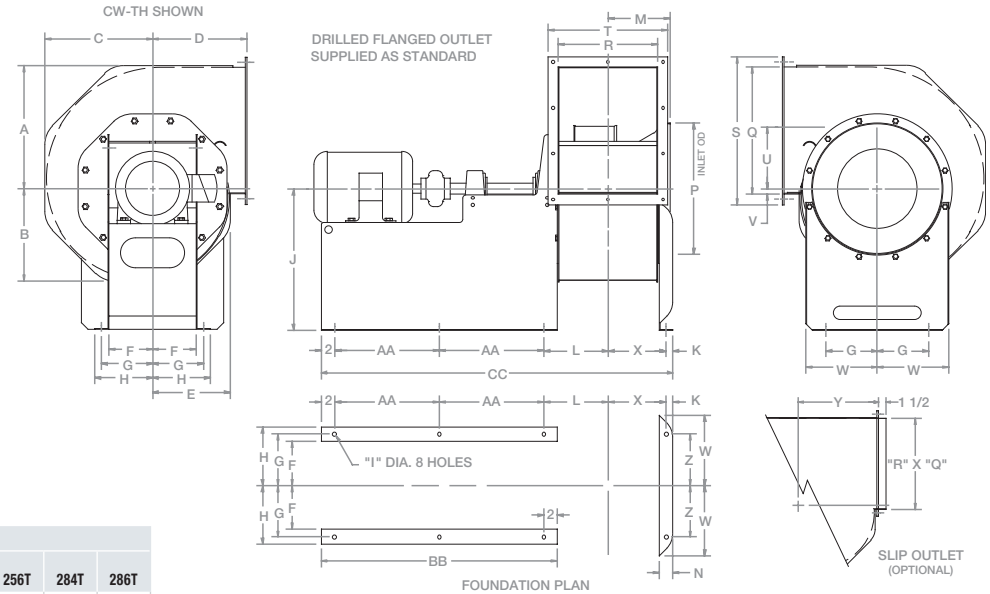

ALL DIMENSIONS SHOWN IN INCHES
*Fan weight is approximate

	CLASS 1 & 2			CLASS 3		
FAN SIZE	SHAFT DIA	KEY-WAY	FAN WT.* NO MOTOR	SHAFT DIA	KEY-WAY	FAN WT.* NO MOTOR
122	1 3/16	1/4 x 1/8	124	1 7/16	3/8 x 3/16	147
135	1 3/16	1/4 x 1/8	138	1 7/16	3/8 x 3/16	164
150	1 3/16	1/4 x 1/8	158	1 7/16	3/8 x 3/16	186
165	1 7/16	3/8 x 3/16	247	1 11/16	3/8 x 3/16	291
182	1 7/16	3/8 x 3/16	281	1 11/16	3/8 x 3/16	327
200	1 7/16	3/8 x 3/16	318	1 15/16	1/2 x 1/4	381

APPROXIMATE MOTOR WEIGHT (LBS.)										
FRAME SIZE	143T	145T	182T	184T	213T	215T	254T	256T	284T	286T
WEIGHT	45	52	85	100	150	170	260	290	390	440

																										143/145T			182/184T			213/215T			254/256T			284/286T		
FAN SIZE	A	B	C	D	E	F	G	H	I	J	K	L	M	N	P	Q	R	S	T	U	V	W	X	Y	Z	AA	BB	CC	AA	BB	CC	AA	BB	CC	AA	BB	CC	AA	BB	CC
122	12 3/8	9 3/8	10 7/8	10	7 7/8	5 1/2	6 3/8	7 1/8	7 1/16	15	3/4	7 1/8	6 9/16	1 5/8	13 3/8	12 5/16	10	15 5/16	13	5 31/32	3/16	9 3/4	6 1/16	8 5/16	6 3/8	11 1/2	27	38 15/16	12 1/2	29	40 15/16	14 1/2	33	44 15/16	N/A			N/A		
135	13 9/16	10 5/16	11 15/16	11	8 11/16	5 1/2	6 3/8	7 1/8	7 1/16	16	3/4	7 19/32	7 1/32	1 5/8	14 3/8	13 9/16	10 15/16	16 9/16	13 15/16	6 9/16	7/32	9 3/4	6 17/32	9 5/16	6 3/8	11 1/2	27	39 7/8	12 1/2	29	41 7/8	14 1/2	33	45 7/8	N/A			N/A		
150	15 1/16	11 7/16	13 1/4	12	9 5/8	5 1/2	6 3/8	7 1/8	7 1/16	18	3/4	8 7/32	7 21/32	1 5/8	16 1/2	15 1/8	12 9/16	18 1/8	15 9/16	7 9/32	9/32	9 3/4	7 7/32	10 5/16	6 3/8	11 1/2	27	41 3/16	12 1/2	29	43 9/16	14 1/2	33	47 3/16	N/A			N/A		
165	16 9/16	12 9/16	14 9/16	13	10 9/16	6 1/2	7 5/8	8 5/8	9/16	19	1	8 13/16	8 1/4	2 1/8	17 1/2	16 5/8	13 3/8	19 5/8	16 3/8	7 31/32	1 1/32	11 1/2	8 1/16	11 1/4	7 5/8	13 1/2	31	46 7/8	14 1/2	33	48 7/8	15 1/2	37	52 7/8	19	42	57 7/8	N/A		
182	18 1/4	13 13/16	16 1/16	14	11 5/8	6 1/2	7 5/8	8 5/8	9/16	21	1	9 1/2	9	2 1/8	19 1/2	18 3/8	14 3/4	21 3/8	17 3/4	8 27/32	1 1/32	11 1/2	8 13/16	12 1/4	7 5/8	13 1/2	31	48 5/16	14 1/2	33	50 5/16	16 1/2	37	54 5/16	19	42	59 5/16	N/A		
200	20	15 1/8	17 9/16	15	12 11/16	7	8 1/8	9 1/8	9/16	22	1	10 3/16	9 11/16	2 1/8	21 1/2	20 1/8	16 1/8	23 1/8	19 1/8	9 11/16	3/8	12 3/4	9 1/2	13 1/4	7 5/8	14 1/2	33	51 11/16	15 1/2	35	53 11/16	17 1/2	39	57 11/16	20	44	62 11/16	21	46	64 11/16

BCA/BCS-222-330
ARRANGEMENT 8

ROTATABLE HOUSING

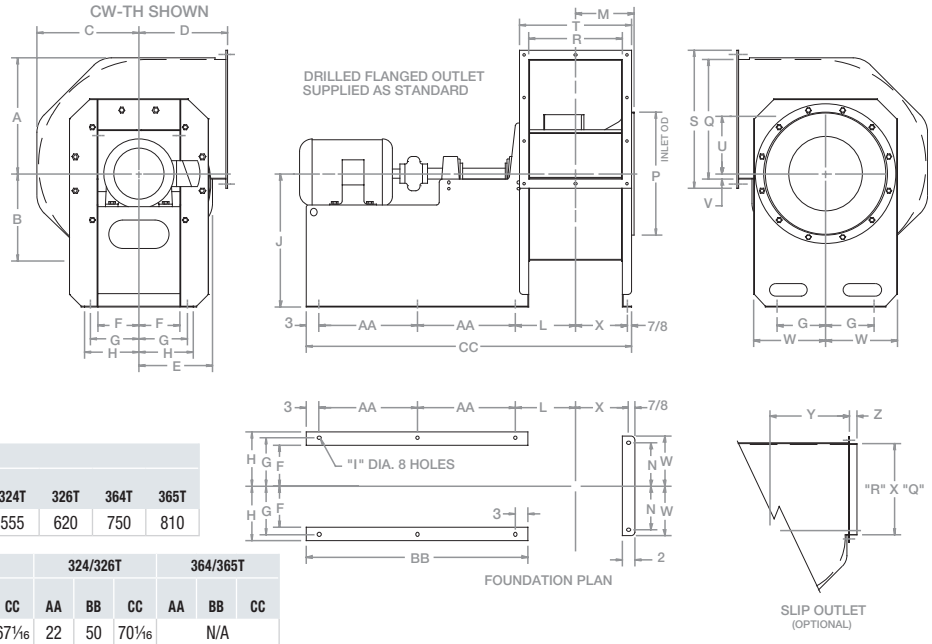

ALL DIMENSIONS SHOWN IN INCHES
*Fan weight is approximate

APPROXIMATE MOTOR WEIGHT (LBS.)												
FRAME SIZE	182T	184T	213T	215T	254T	256T	284T	286T	324T	326T	364T	365T
WEIGHT	85	100	150	170	260	290	390	440	555	620	750	810

	182/184T			213/215T			254/256T			284/286T			324/326T			364/365T		
FAN SIZE	AA	BB	CC	AA	BB	CC	AA	BB	CC	AA	BB	CC	AA	BB	CC	AA	BB	CC
222	15	36	56 1/16	17	40	60 1/16	19 1/2	45	65 1/16	20 1/2	47	67 1/16	22	50	70 1/16	N/A		
245	16 1/2	39	60 13/16	18 1/2	43	64 13/16	21	48	69 13/16	22	50	71 13/16	23 1/2	53	74 13/16	24	54	75 13/16
270	17	40	63 7/8	19	44	67 7/8	21 1/2	49	72 7/8	22 1/2	51	74 7/8	24	54	77 7/8	24 1/2	55	78 7/8
300	N/A			19	44	70 1/4	21 1/2	49	75 1/4	22 1/2	51	77 1/4	24	54	80 1/4	24 1/2	55	81 1/4
330	N/A			21	48	76 11/16	23 1/2	53	81 11/16	24 1/2	55	83 11/16	26	58	86 11/16	26 1/2	59	87 11/16

				DISCHARGE																					DISCHARGE				CLASS 1 & 2			CLASS 3		
				TH, UB, DB, BH	TAU, BAU	TAD																			TH, UB, BH	TAU, BAU	TAD							
FAN SIZE	A	B	C	D	D	D	E	F	G	H	I	J	L	M	N	P	Q	R	S	T	U	V	W	X	Y	Y	Y	Z	SHAFT DIA	KEY-WAY	FAN WT.* NO MOTOR	SHAFT DIA	KEY-WAY	FAN WT.* NO MOTOR
222	22 1/4	16 13/16	19 1/2	16	20 1/2	23 3/4	14 1/8	8	9 1/2	10 1/2	1 1/16	25	12 3/32	10 23/32	10	23 1/2	22 3/8	17 15/16	25 3/8	20 15/16	10 25/32	13/32	13 5/8	10 3/32	14 3/8	18 7/8	22 1/8	1 3/8	1 11/16	3/8 x 3/16	474	1 15/16	1/2 x 1/4	528
245	24 7/16	18 1/2	21 1/2	18	22 1/2	26 3/4	15 1/2	9	10 1/2	11 1/2	1 1/16	27	12 31/32	12 3/32	12	26 1/2	24 11/16	19 11/16	28 11/16	23 11/16	11 7/8	15/32	15 1/2	10 31/32	15 3/4	20 1/2	24 3/4	2	1 11/16	3/8 x 3/16	573	2 3/16	1/2 x 1/4	650
270	26 15/16	20 3/8	23 5/8	19 1/2	24	28 1/4	17 1/16	10	11 1/2	12 1/2	1 3/16	30	14 1/32	13 5/32	13	28 1/2	27 3/16	21 11/16	31 3/16	25 11/16	13 1/16	17/32	16 11/16	11 31/32	17 5/16	22 1/16	26 5/16	1 15/16	1 11/16	3/8 x 3/16	775	2 3/16	1/2 x 1/4	859
300	29 7/8	22 5/8	26 1/4	22	26	30 1/2	18 15/16	11	12 1/2	13 1/2	1 3/16	33	15 7/32	14 11/32	14 1/2	31 1/2	30 3/16	24 1/16	34 3/16	28 1/16	14 17/32	9/16	18 3/16	13 5/32	19 3/4	24	28 1/2	2	1 15/16	1/2 x 1/4	936	2 7/16	5/8 x 5/16	1041
330	32 13/16	24 13/16	28 13/16	24	28 3/4	33 3/4	20 13/16	11	12 1/2	13 1/2	1 3/16	36	16 7/16	15 9/16	16	34 1/2	33 1/4	26 9/16	37 1/4	30 9/16	15 31/32	21/32	19 11/16	14 3/8	21 3/4	26 3/4	31 3/4	2	2 3/16	1/2 x 1/4	1113	2 11/16	5/8 x 5/16	1226

BCA/BCS-365-542
ARRANGEMENT 8

FIXED HOUSING

Also available in sizes 600 and 660. Contact Factory for drawing.

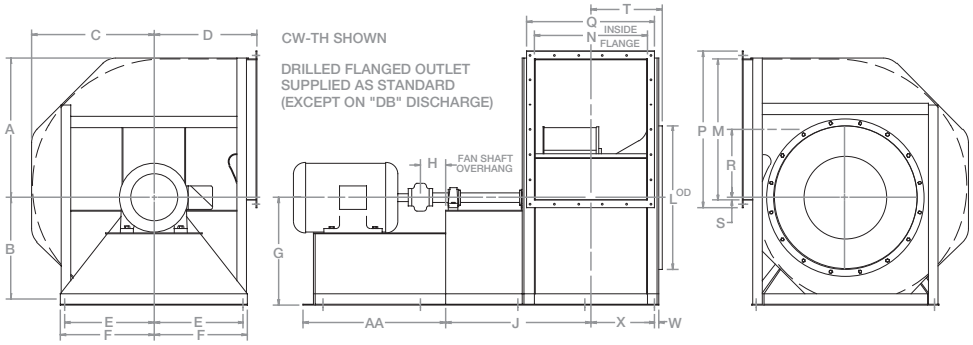

FAN SIZE	Y	DISCHARGE ALL EXCEPT TAD Z	DISCHARGE TAD Z
365	2	24¾	39 13/16
402	2	27¾	43
445	2	30¾	45⅝
490	3	32¾	52 15/16
542	3	36¾	56⅝

ALL DIMENSIONS SHOWN IN INCHES
*Fan weight is approximate

APPROXIMATE MOTOR WEIGHT (LBS.)									
FRAME SIZE	324T	326T	364T	365T	404T	405T	444T	445T	447T
WEIGHT	555	620	750	810	1050	1150	1400	1575	2100

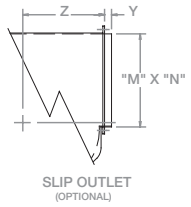

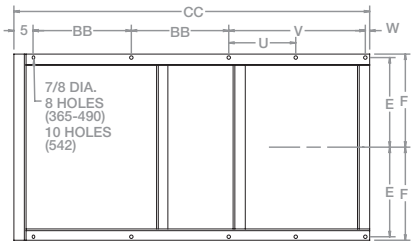

FOUNDATION PLAN

FAN SIZE	MOTOR FRAME SIZES 324T/326T AA	BB	CC	364T/365T AA	BB	CC	404T/405T AA	BB	CC	444T/445T AA	BB	CC	447T AA	BB	CC
365	36	24 15/16	91⅜	37	25 7/16	92⅜	42	27 15/16	97⅜	N/A			N/A		
402	N/A			37	26	96 7/16	42	28½	101 7/16	47	31	106 7/16	N/A		
445	N/A			37	27	101 13/16	42	29½	106 13/16	47	32	111 13/16	N/A		
490	N/A			38	29 7/16	110¼	43	31 5/16	115¼	48	34 7/16	120¼	53	36 15/16	125¼
542	N/A			N/A			43	32½	120 9/16	48	35	125 9/16	53	37½	130 9/16

FAN SIZE	A	B	C	D (DISCHARGE ALL EXCEPT TAD)	D (DISCHARGE TAD)	E	F	G (TH)	G (TAU)	G (UB)	G (BAU)	G (BH)	G (DB)	G (TAD)	H	J	L	M	N	P	Q	R	S	T	U	V	W	X	CLASS 1 & 2 SHAFT DIA	CLASS 1 & 2 KEY-WAY	CLASS 1 & 2 FAN WT.* NO MOTOR	CLASS 3 SHAFT DIA	CLASS 3 KEY-WAY	CLASS 3 FAN WT.* NO MOTOR
365	36 5/16	27 7/16	31⅞	27	42 1/16	23¼	24¼	28	30	33	35	40	27	33	6½	37 1/16	37½	36¾	29¼	40¾	33¼	17 1/16	1 1/16	16 13/16	–	35½	1	16 1/16	2 7/16	⅝ x 5/16	1648	2 1/16	⅝ x 5/16	1891
402	40	30¼	35⅛	30	45¼	25¼	26¼	31	33	36	38	43	30	35	7	40 9/32	41½	40 9/16	32 3/16	44 9/16	36 3/16	19 15/32	1 3/16	18 9/32	–	38 7/16	1	18 5/32	2 1/16	⅝ x 5/16	2029	2 5/16	¾ x ⅜	2267
445	44 7/32	33 13/32	38 25/32	33	47⅞	27	28¼	34	37	40	42	47	33	37	7	43 31/32	45½	44 13/16	35 9/16	48 13/16	39 9/16	21 9/16	27/32	19 31/32	–	41 9/16	1¼	19 19/32	2 1/16	⅝ x 5/16	2333	2 5/16	¾ x ⅜	2627
490	48 21/32	36¾	42 11/16	36	56 3/16	31¼	32½	37	40	43	46	54	36	44	8	49⅝	51½	49 5/16	39⅛	55 5/16	45⅛	23¾	29/32	22¾	–	45⅛	1¼	21⅜	2 5/16	¾ x ⅜	3037	3 7/16	⅞ x 7/16	3414
542	53 13/16	40 21/32	47¼	40	59⅞	33¾	35	41	45	48	51	59	40	47	8	52 27/32	56¾	54⅝	43 5/16	60⅝	49 5/16	26¼	1 1/16	24 27/32	24 21/32	49 5/16	1¼	23 15/32	3 3/16	¾ x ⅜	3521	3 1/16	⅞ x 7/16	4021

BCA/BCS-122-200
ARRANGEMENT 10

ROTATABLE HOUSING

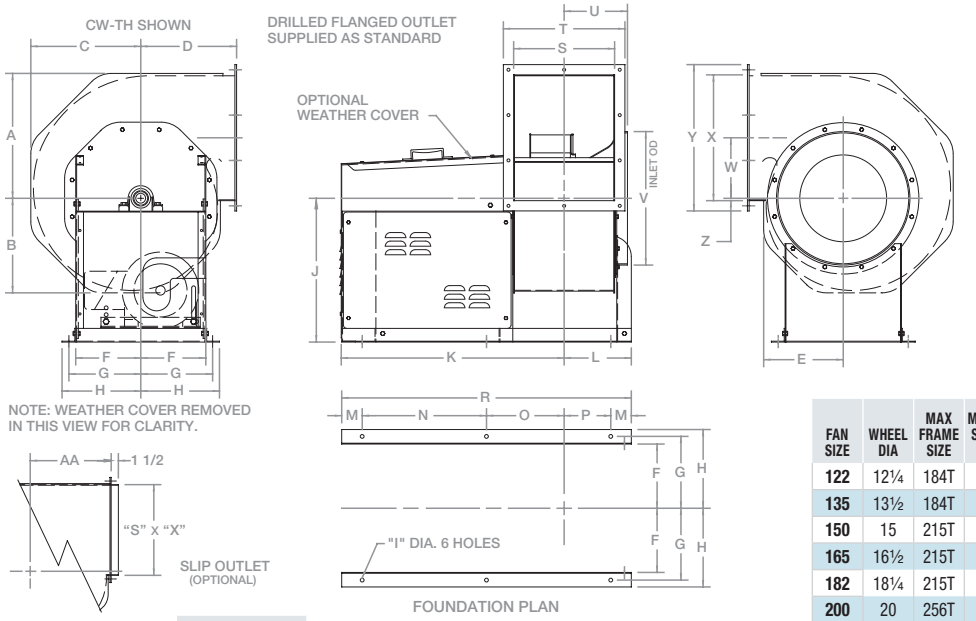

FOUNDATION PLAN

FRAME SIZE	APPROX. MOTOR WEIGHT WEIGHT LBS.
143T	45
145T	52
182T	85
184T	100
213T	150
215T	170
254T	260
256T	290

ALL DIMENSIONS SHOWN IN INCHES
*Fan weight is approximate
NOTE: CLASS 3 NOT AVAILABLE

FAN SIZE	WHEEL DIA	MAX FRAME SIZE	MAX FAN SHEAVE O.D.	143T/145T MIN	143T/145T MAX	182T/184T MIN	182T/184T MAX	213T/215T MIN	213T/215T MAX	254T/256T MIN	254T/256T MAX
122	12¼	184T	5½	7.8	9.8	6.8	8.8	–	–	–	–
135	13½	184T	6	8.8	10.8	7.8	9.8	–	–	–	–
150	15	215T	6½	10.1	12.5	9.1	11.5	8.4	10.8	–	–
165	16½	215T	7	11.1	13.5	10.1	12.5	9.3	11.8	–	–
182	18¼	215T	8	13.1	15.5	12.1	14.5	11.3	13.7	–	–
200	20	256T	9	13.7	16.9	12.7	15.9	12	15.2	11	14.2

FAN SIZE	A	B	C	D (DISCHARGE TH, UB, DB, BH)	D (DISCHARGE TAU, BAU)	D (DISCHARGE TAD)	E	F	G	H	I	J	K	L	M	N	O	P	R	S	T	U	V	W	X	Y	Z	AA	CLASS 1 & 2 SHAFT DIA	CLASS 1 & 2 KEY-WAY	CLASS 1 & 2 FAN WT.* NO MOTOR
122	12⅜	9⅜	10⅞	10	10	13¾	7⅞	6 7/16	7 7/16	8 7/16	7/16	15	27 1/16	6 15/16	3	14 9/32	10 11/32	3 15/16	34 9/16	10	13	6 9/16	13⅜	5 31/32	12 5/16	15 5/16	3/16	8 5/16	1 3/16	¼ x ⅛	170
135	13 9/16	10 5/16	11 15/16	11	11	13¾	8 1/16	6 7/16	7 7/16	8 7/16	7/16	16	28 5/32	7 13/32	3	14¾	10 11/32	4 13/32	35½	10 15/16	13 15/16	7 1/32	14⅜	6 9/16	13 9/16	16 9/16	7/32	9 5/16	1 3/16	¼ x ⅛	185
150	15 1/16	11 7/16	13¼	12	15	19¼	9⅝	9½	10½	11½	7/16	18	30 25/32	8 1/32	3	16⅜	11 11/32	5 1/32	38¾	12 3/16	15 3/16	7 21/32	16½	7 9/32	15⅛	18⅛	9/32	10 5/16	1 3/16	¼ x ⅛	235
165	16 9/16	12 9/16	14 9/16	13	13	18½	10 9/16	9½	10½	11½	9/16	19	31⅞	9⅛	3	17 15/32	11 11/32	6⅛	40 15/16	13⅜	16⅜	8¼	17½	7 31/32	16⅝	19⅝	11/32	11¼	1 7/16	⅜ x 3/16	285
182	18¼	13 13/16	16 1/16	14	14	18½	11⅝	9½	10½	11½	9/16	21	32 9/16	9 13/16	3	18 5/32	11 11/32	6 13/16	42 5/16	14¾	17¾	9	19½	8 27/32	18⅜	21⅜	11/32	12¼	1 7/16	⅜ x 3/16	320
200	20	15⅛	17 9/16	15	15	20	12 11/16	10⅜	11⅜	12⅜	9/16	22	37¼	10½	3	20 27/32	13 11/32	7½	47 11/16	16⅛	19⅛	9 11/16	21½	9 11/16	20⅛	23⅛	⅜	13¼	1 7/16	⅜ x 3/16	375

BCA/BCS-222-330
ARRANGEMENT 10

ROTATABLE HOUSING

APPROX. MOTOR WT.	
FRAME SIZE	WEIGHT LBS.
143T	45
145T	52
182T	85
184T	100
213T	150
215T	170
254T	260
256T	290
284T	390
286T	440

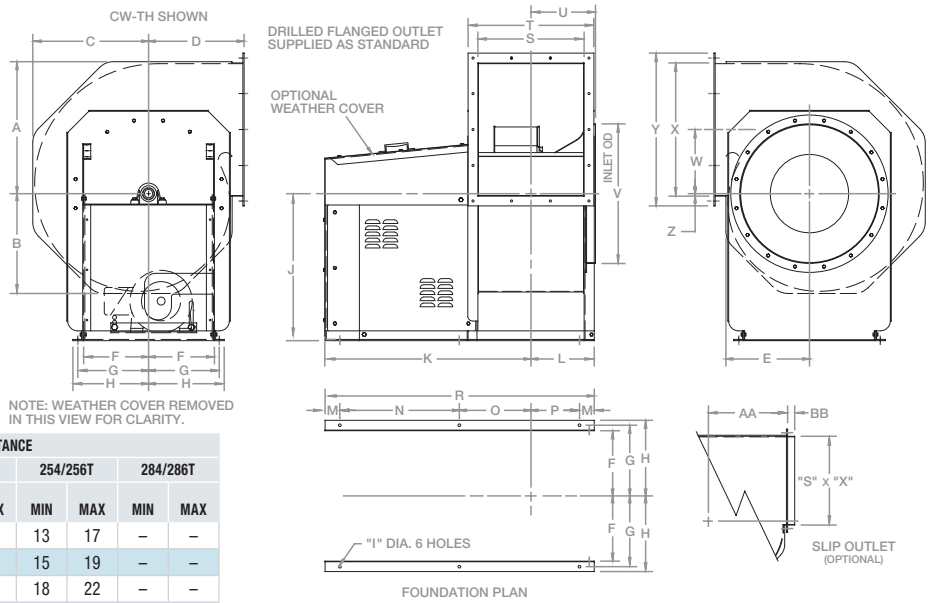

ALL DIMENSIONS SHOWN IN INCHES
*Fan weight is approximate
NOTE: CLASS 3 NOT AVAILABLE

FAN SIZE	WHEEL DIA	MAX FRAME SIZE	MAX FAN SHEAVE O.D.	BELT CENTER DISTANCE 143/145T MIN	143/145T MAX	182/184T MIN	182/184T MAX	213/215T MIN	213/215T MAX	254/256T MIN	254/256T MAX	284/286T MIN	284/286T MAX
222	22¼	256T	10	15.7	19.8	14.7	18.8	14	18	13	17	–	–
245	24½	256T	11	17.7	21.8	16.7	20.8	16	20	15	19	–	–
270	27	256T	12	20.7	24.8	19.7	23.8	19	23	18	22	–	–
300	30	286T	13½	22.6	26.7	21.6	25.7	20.8	25	19.8	24	19.1	
330	33	286T	14¾	25.7	29.8	24.7	28.8	24	28	23	27	22.2	24.5

FAN SIZE	A	B	C	D (DISCHARGE TH, UB, DB, BH)	D (DISCHARGE TAU, BAU)	D (DISCHARGE TAD)	E	F	G	H	I	J	K	L	M	N	O	P	R	S	T	U	V	W	X	Y	Z	AA (DISCHARGE TH, UB, DB, BH)	AA (DISCHARGE TAU, BAU)	AA (DISCHARGE TAD)	BB	CLASS 1 & 2 SHAFT DIA	CLASS 1 & 2 KEY-WAY	FAN WT.* NO MOTOR
222	22¼	16 13/16	19½	16	20½	23¾	14⅛	11¼	12¼	13¼	11/16	25	39 5/32	10 31/32	3	22 1/32	14 1/16	7 31/32	50 1/16	17 15/16	20 15/16	10 23/32	23½	10 25/32	22⅜	25⅜	13/32	14⅜	18⅞	22⅛	1⅜	1 11/16	⅜ x 3/16	565
245	24 7/16	18½	21½	18	22½	26¾	15½	12⅞	13⅞	14⅞	11/16	27	40 1/32	11 27/32	3	22 29/32	14 1/16	8 27/32	51 13/16	19 11/16	23 11/16	12 3/32	26½	11⅞	24 11/16	28 11/16	15/32	15¾	20½	24¾	2	1 11/16	⅜ x 3/16	670
270	26 15/16	20⅜	23⅝	19½	24	28¼	17 1/16	13 7/16	14 7/16	15 7/16	11/16	30	42 3/32	12 29/32	3	24 15/32	14 9/16	9 29/32	54 15/16	21 11/16	25 11/16	13 5/32	28½	13 1/16	27 3/16	31 3/16	17/32	17 5/16	22 1/16	26 5/16	1 15/16	1 11/16	⅜ x 3/16	805
300	29⅞	22⅝	26¼	22	26	30½	18 15/16	15	16	17	11/16	33	47 9/32	14 3/32	3	27 21/32	16 9/16	11 3/32	61 5/16	24 1/16	28 1/16	14 11/32	31½	14 17/32	30 9/16	34 3/16	9/16	19¾	24	28½	2	1 15/16	½ x ¼	1000
330	32 13/16	24 13/16	28 13/16	24	28¾	33¾	20 13/16	16½	17½	18½	11/16	36	48 15/32	15 9/32	3	28 27/32	16 9/16	12 9/32	63 11/16	26 7/16	30 7/16	15 9/16	34½	15 31/32	33¼	37¼	21/32	21¾	26¾	31¾	2	2 3/16	½ x ¼	1175

BCA/BCS-365-660
ARRANGEMENT 3

SWSI FIXED HOUSING

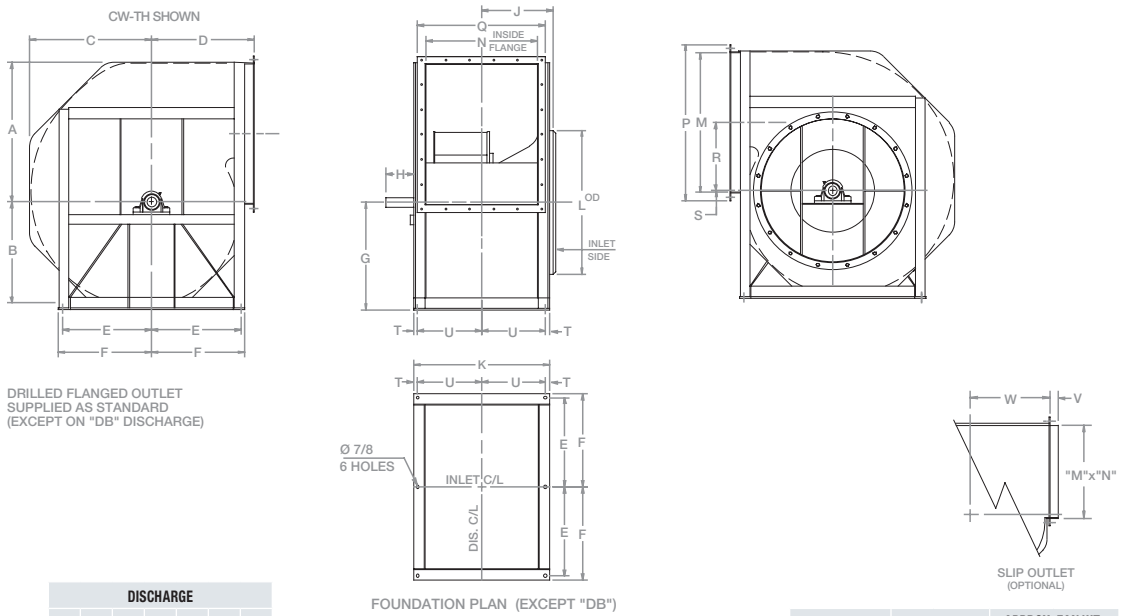

ALL DIMENSIONS SHOWN IN INCHES

FAN SIZE	V	W (DISCHARGE ALL EXCEPT TAD)	W (DISCHARGE TAD)
365	2	24¾	39 13/16
402	2	27¾	43
445	2	30¾	45⅝
490	3	32¾	52 15/16
542	3	36¾	56⅝
600	4	40¾	66½
660	4	44¾	70⅝

FAN SIZE	A	B	C	D (DISCHARGE ALL EXCEPT TAD)	D (DISCHARGE TAD)	E	F	G (DISCHARGE TH)	G (DISCHARGE TAU)	G (DISCHARGE UB)	G (DISCHARGE BAU)	G (DISCHARGE BH)	G (DISCHARGE DB)	G (DISCHARGE TAD)	H	J	K	L	M	N	P	Q	R	S	T	U	CLASS 1 & 2 SHAFT DIA	CLASS 1 & 2 KEY-WAY	CLASS 3 SHAFT DIA	CLASS 3 KEY-WAY	APPROX. FAN WT. NO MOTOR CLASS 1 & 2	APPROX. FAN WT. NO MOTOR CLASS 3
365	36 5/16	27 7/16	31⅞	27	42 1/16	23¼	24¼	28	30	33	35	40	27	33	6½	16 13/16	35⅜	37½	36¾	29¼	40¾	33¼	17 11/16	1 1/16	1	16 11/16	2 3/16	½ x ¼	2 7/16	⅝ x 5/16	1226	1448
402	40	30¼	35⅛	30	45¼	25¼	26¼	31	33	36	38	43	30	35	7	18 9/32	38 5/16	41½	40 9/16	32 3/16	44 9/16	36 3/16	19 15/32	1 3/16	1	18 5/32	2 3/16	½ x ¼	2 7/16	⅝ x 5/16	1504	1742
445	44 7/32	33 13/32	38 25/32	33	47⅞	27	28¼	34	37	40	42	47	33	37	7	19 31/32	41 11/16	45½	44 13/16	35 9/16	48 13/16	39 9/16	21 9/16	27/32	1¼	19 19/32	2 7/16	⅝ x 5/16	2 11/16	⅝ x 5/16	1740	1948
490	48 21/32	36¾	42 11/16	36	56 3/16	31¼	32½	37	40	43	46	54	36	44	8	22¾	45¼	51½	49 5/16	39⅛	55 5/16	45⅛	23¾	29/32	1¼	21⅜	2 7/16	⅝ x 5/16	3 3/16	¾ x ⅜	2290	2672
542	53 13/16	40 21/32	47¼	40	59⅞	33¾	35	41	45	48	51	59	40	47	8	24 27/32	49 7/16	56¾	54⅝	43 5/16	60⅝	49 5/16	26¼	1 1/16	1¼	23 15/32	2 11/16	⅝ x 5/16	3 3/16	¾ x ⅜	2694	3172
600	59½	44 15/16	52 7/32	44	70½	37¾	39	46	49	53	57	65	44	56	8	27⅞	54	63¼	60 7/16	47⅞	68 7/16	55⅞	29½	1 3/16	1¼	25¾	2 15/16	¾ x ⅜	3 7/16	⅞ x 7/16	3073	3667
660	65 7/16	49 13/32	57 13/32	48¾	74⅝	40¾	42	50	54	58	62	71	49	59	8	29⅜	58¾	69¼	66½	52⅝	74½	60⅝	32 1/16	1 3/16	1¼	28⅛	3 3/16	¾ x ⅜	3 11/16	⅞ x 7/16	3381	4195

BCA/BCS-122-200
ARRANGEMENT 1
UNITARY BASE

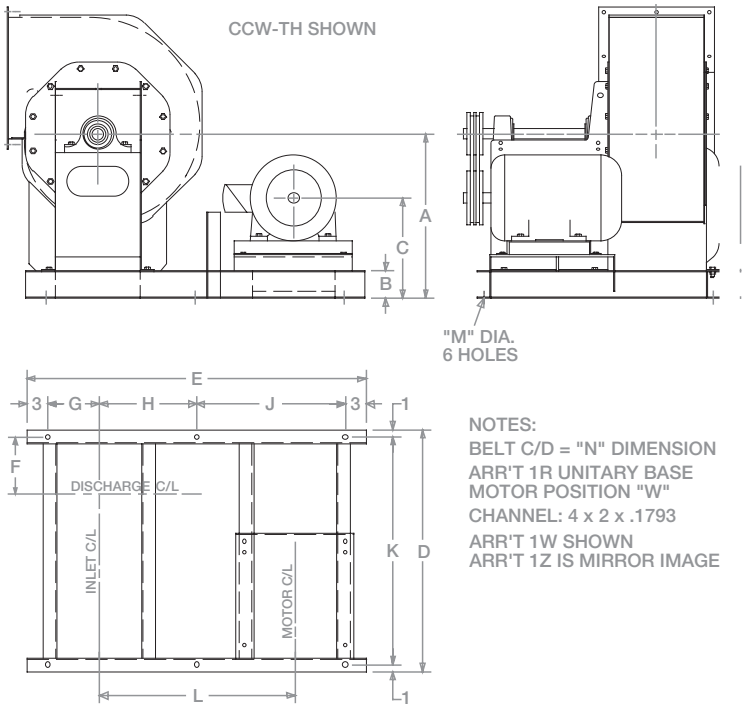

NOTES:
BELT C/D = "N" DIMENSION
ARR'T 1R UNITARY BASE
MOTOR POSITION "W"
CHANNEL: 4 x 2 x .1793
ARR'T 1W SHOWN
ARR'T 1Z IS MIRROR IMAGE

ALL DIMENSIONS SHOWN IN INCHES

FAN SIZE	FRAME SIZE	A	B	C	D	E	F	G	H	J	K	L	M	N C/D	APPROX. WT. FAN, MTR, UNIT CLASS 1 & 2	CLASS 3
122	143T	19	4	10¼	27 3/16	30	6 1/16	6¾	5¼	12	25 3/16	14½	9/16	16.9	208	231
	145T														216	239
	182T			11⅝		32			6¼	13		15½		17.2	256	279
	184T														272	295
	213T			12⅝		36			8¼	15		18½		19.6	332	355
	215T														354	377
	254T			12⅝		39			9¾	16½		20		20.5	462	485
	256T														493	516
135	143T	20	4	10¼	28⅛	30	6 17/32	6¾	5¼	12	26⅛	14½	9/16	17.5	224	250
	145T														232	258
	182T			11⅝		32			6¼	13		15½		17.6	272	298
	184T														288	314
	213T			12⅝		37			8¾	15½		19½		20.8	349	375
	215T														371	397
	254T			14 7/16		40			10¼	17		21		21.7	479	505
	256T														510	536
150	143T	22	4	10¼	29 7/16	30	7/32	6¾	5¼	12	27 7/16	14½	9/16	18.7	244	272
	145T														252	280
	182T			11⅝		32			6¼	13		15½		18.6	292	320
	184T														308	336
	213T			12⅝		37½			9	15¾		20		22.1	370	398
	215T														392	420
	254T			14 7/16		41			10¾	17½		22		23.3	499	527
	256T														530	558
	284T			15 3/16		43			11¾	18½		23		24.0	638	666
	286T														689	717
165	182T	23	4	11⅝	35⅞	35½	8 1/16	8½	6¼	14¾	33⅞	17	1 1/16	20.4	377	421
	184T														393	437
	213T			12⅝		37½			7¼	15¾		18		20.8	452	496
	215T														474	518
	254T			14 7/16		44½			10¾	19¼		23½		25.0	584	628
	256T														615	659
	284T			15 3/16		46½			11¾	20¼		24½		25.7	723	767
	286T														774	818
182	182T	25	4	11⅝	37 5/16	35½	8 13/16	8½	6¼	14¾	35 5/16	17	1 1/16	21.6	409	455
	184T														425	471
	213T			12⅝		37½			7¼	15¾		18		21.8	484	530
	215T														506	552
	254T			14 7/16		46			11½	20		25		27.1	617	663
	256T														648	694
	284T			15 3/16		48			12½	21		26		27.8	756	802
	286T														807	853
200	182T	26	4	11⅝	41 11/16	36½	9½	9⅜	5⅞	15¼	39 11/16	17	1 1/16	22.3	451	515
	184T														467	531
	213T			12⅝		38½			6⅞	16¼		18		22.4	525	589
	215T														547	611
	254T			14 7/16		48½			11⅞	21¼		26½		28.9	660	724
	256T														691	755
	284T			15 3/16		50½			12⅞	22¼		27½		29.5	799	863
	286T														850	914
	324T			16 11/16		53½			14⅜	23¾		29		30.5	980	1044
	326T														1046	1110

BCA/BCS-222-330
ARRANGEMENT 1
UNITARY BASE

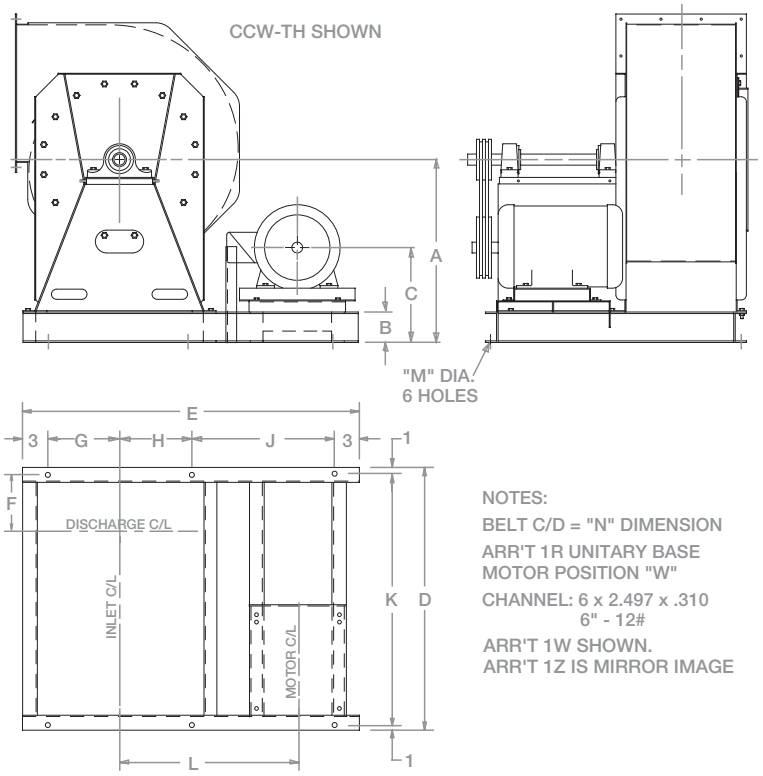

NOTES:
BELT C/D = "N" DIMENSION
ARR'T 1R UNITARY BASE
MOTOR POSITION "W"
CHANNEL: 6 x 2.497 x .310
6" - 12#
ARR'T 1W SHOWN.
ARR'T 1Z IS MIRROR IMAGE

ALL DIMENSIONS SHOWN IN INCHES

FAN SIZE	FRAME SIZE	A	B	C	D	E	F	G	H	J	K	L	M	N C/D	APPROX. WT. FAN, MTR, UNIT CLASS 1 & 2	CLASS 3
222	182T	31	6	13⅝	45 11/16	47	10 3/32	13	7½	20½	43 11/16	24	¾	29.6	754	809
	184T														770	825
	213T			14⅝		50			9	22		26		30.7	833	888
	215T														855	910
	254T			16 7/16		52			10	23		27		30.7	964	1019
	256T														995	1050
	284T			17 3/16		56			12	25		30		32.8	1109	1164
	286T														1160	1215
	324T			18 11/16		59			13½	26½		31		33.4	1294	1349
	326T														1360	1415
	364T			19¾		62			15	28		33		34.9	1526	1581
	365T														1587	1642
245	182T	33	6	13⅝	47 7/16	51	10 31/32	15	7½	22½	45 7/16	26	¾	32.4	844	922
	184T														860	938
	213T			14⅝		54			9	24		28		33.5	923	1001
	215T														945	1023
	254T			16 7/16		56			10	25		29		33.4	1054	1132
	256T														1085	1163
	284T			17 3/16		60			12	27		32		35.5	1199	1277
	286T														1250	1328
	324T			18 11/16		63			13½	28½		33		36.0	1384	1462
	326T														1450	1528
	364T			19¾		66			15	30		35		37.4	1616	1694
	365T														1677	1755
270	213T	36	6	14⅝	51½	56	11 31/32	16	9	25	49½	29	⅞	36.0	1092	1178
	215T														1114	1200
	254T			16 7/16		58			10	26		30		35.8	1223	1309
	256T														1254	1340
	284T			17 3/16		60			11	27		31		36.0	1364	1450
	286T														1415	1501
	324T			18 11/16		66			14	30		35		39.0	1555	1641
	326T														1621	1707
	364T			19¾		69			15½	31½		37		40.4	1787	1873
	365T														1848	1934
	404T			22¼		73			17½	33½		39		41.4	2135	2221
	405T														2236	2322
300	213T	39	6	14⅝	53⅞	58	13 5/32	17½	8½	26	51⅞	30	⅞	38.7	1252	1359
	215T														1274	1381
	254T			16 7/16		62			10½	28		32		39.2	1387	1494
	256T														1418	1525
	284T			17 3/16		64			11½	29		33		39.3	1528	1635
	286T														1579	1686
	324T			18 11/16		70			14½	32		38		43.1	1719	1826
	326T														1785	1892
	364T			19¾		73			16	33½		39		43.5	1952	2059
	365T														2013	2120
	404T			22¼		76			17½	35		41		44.3	2298	2405
	405T														2399	2506
	444T			23¼		79			19	36½		42		44.9	2690	2797
	445T														2867	2974
330	254T	42	6	16 7/16	58 5/16	64	14⅜	19	10	29	56 5/16	33	⅞	41.7	1559	1673
	256T														1590	1704
	284T			17 3/16		66			11	30		34		41.8	1696	1810
	286T														1747	1861
	324T			18 11/16		75			15½	34½		41		47.2	1897	2011
	326T														1963	2077
	364T			19¾		77			16½	35½		42		47.5	2128	2242
	365T														2189	2303
	404T			22¼		81			18½	37½		44		48.2	2476	2590
	405T														2577	2691
	444T			23¼		83			19½	38½		45		48.8	2866	2980
	445T														3043	3157

BCA/BCS-365 & 402
ARRANGEMENT 1
UNITARY

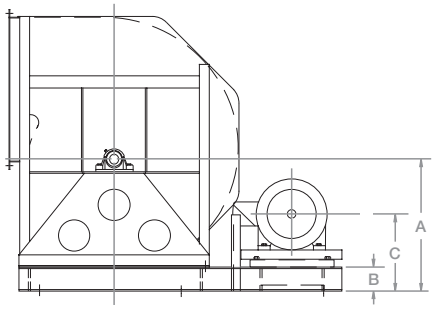

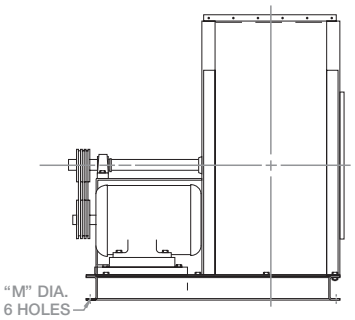

NOTES:
BELT C/D = "N" DIMENSION
ARR'T IR UNITARY BASE
MOTOR POSITION "W"
CHANNEL: 6 x 2.497 x .310
6" - 12#
ARR'T 1W SHOWN,
ARR'T 1Z IS MIRROR IMAGE

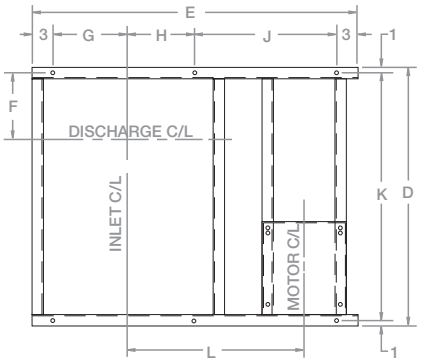

ALL DIMENSIONS SHOWN IN INCHES

FAN SIZE	FRAME SIZE	TH A	TAU A	UB A	BAU A	BH A	DB A	TAD A	B	C	D	E	F	G	H	J	K	L	M	TH N	TAU N	UB N	BAU N	BH N	DB N	TAD N	APPROX. WT. FAN, MTR, UNIT CLASS 1 & 2	APPROX. WT. FAN, MTR, UNIT CLASS 3
365	254T	34	36	39	41	46	33	39	6	16 7/16	65 3/16	69	16 1/16	21 1/4	10 1/4	31 1/2	63 3/16	35	7/8	39.2	40.1	41.6	42.8	45.8	38.7	41.6	2084	2329
	256T																										2115	2360
	284T									17 3/16		71			11 1/4	32 1/2		36		39.7	40.6	42.1	43.2	46.1	39.3	42.1	2225	2470
	286T																										2276	2521
	324T									18 11/16		74			12 3/4	34		38		41.0	41.8	43.1	44.1	46.8	40.6	43.1	2410	2655
	326T																										2476	2721
	364T									19 3/4		82			16 3/4	38		45		47.2	47.8	48.9	49.8	52.1	46.9	48.9	2652	2897
	365T																										2713	2958
	404T									22 1/4		86			18 3/4	40		47		48.4	49.0	49.9	50.6	52.7	48.2	49.9	3007	3252
	405T																										3161	3406
	444T									23 1/4		88			19 3/4	41		48		49.2	49.7	50.5	51.2	53.1	49.0	50.5	3553	3798
	445T																										3640	3885
402	254T	37	39	42	44	49	36	41	6	16 7/16	69 1/8	73	18 5/32	23 1/4	10 1/4	33 1/2	67 1/8	37	7/8	42.3	43.3	45.0	46.1	49.3	41.9	44.4	2417	2657
	256T																										2448	2688
	284T									17 3/16		75			11 1/4	34 1/2		38		42.9	43.8	45.4	46.5	49.6	42.4	44.8	2559	2799
	286T																										2600	2850
	324T									18 11/16		78			12 3/4	36		40		44.0	44.9	46.3	47.3	50.2	43.6	45.8	2744	2984
	326T																										2810	3050
	364T									19 3/4		87			17 1/4	40 1/2		48		51.0	51.7	52.9	53.8	56.2	50.7	52.5	2988	3228
	365T																										3049	3289
	404T									22 1/4		91			19 1/4	42 1/2		50		52.1	52.7	53.8	54.5	56.7	51.9	53.4	3343	3583
	405T																										3497	3737
	444T									23 1/4		93			20 1/4	43 1/2		51		52.8	53.4	54.3	55.1	57.1	52.6	54.0	3888	4128
	445T																										3975	4215

BCA/BCS-445 THRU 660
ARRANGEMENT 1
UNITARY

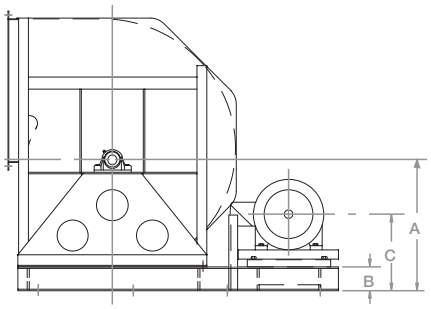

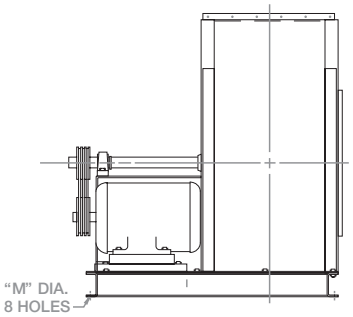

NOTES:
BELT C/D = "N" DIMENSION
ARR'T IR UNITARY BASE
MOTOR POSITION "W"
CHANNEL: 8 x 2.978 x .353
8" - 18.7#
ARR'T 1W SHOWN,
ARR'T 1Z IS MIRROR IMAGE

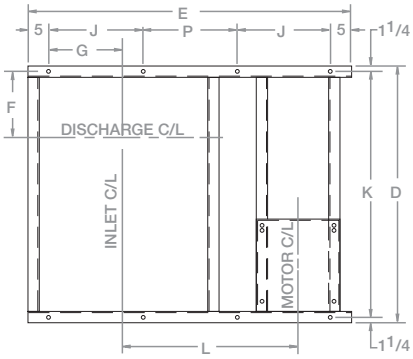

ALL DIMENSIONS SHOWN IN INCHES

FAN SIZE	FRAME SIZE	TH A	TAU A	UB A	BAU A	BH A	DB A	TAD A	B	C	D	E	F	G	J	K	L	M	TH N	TAU N	UB N	BAU N	BH N	DB N	TAD N	P	APPROX. WT. FAN, MTR, UNIT CLASS 1 & 2	APPROX. WT. FAN, MTR, UNIT CLASS 3
445	324T	42	45	48	50	55	41	45	8	20 11/16	72 1/2	82	19 19/32	23 1/4	24	70	53	7/8	47.1	48.5	50.1	51.2	54.2	46.6	48.5	24	3236	3531
	326T																										3302	3597
	364T									21 3/4		86			25		44		48.4	49.8	51.2	52.3	55.1	48.0	49.8	26	3474	3769
	365T																										3535	3830
	404T									24 1/4		96			29				55.9	56.9	58.1	58.9	61.3	55.6	56.9	28	3862	4157
	405T																										4016	4311
	444T									25 1/4		100			30		55		57.5	58.4	59.5	60.3	62.5	57.2	58.4	30	4415	4710
	445T																										4502	4797
	447T									25 5/16		100			30		55		57.5	58.4	59.5	60.3	62.5	57.2	58.4	30	4634	4929
490	324T	45	48	51	54	62	44	52	8	20 11/16	79 1/16	92	21 3/8	27 1/2	28	76 9/16	47	7/8	52.8	54.4	55.9	57.6	62.6	52.5	56.5	26	3886	4266
	326T																										3952	4332
	364T									21 3/4		94			28		48		53.3	54.9	56.2	57.8	62.6	52.9	56.7	28	4119	4499
	365T																										4180	4560
	404T									24 1/4		97			29				54.1	55.3	56.7	58.2	62.6	53.8	57.2	29	4484	4864
	405T																										4638	5018
	444T									25 1/4		107			33		58		61.3	62.3	63.5	64.7	68.7	61.0	63.9	31	5057	5437
	445T																										5144	5524
	447T									25 5/16		107			33		58		61.3	62.3	63.5	64.7	68.7	61.0	63.9	31	5276	5656
542	324T	49	53	56	59	67	48	55	8	20 11/16	83 1/4	96	23 15/32	30	29	80 3/4	49	7/8	56.6	58.7	60.4	62.2	67.4	56.1	59.8	28	4314	4814
	326T																										4380	4880
	364T									21 3/4		99			30		51		57.8	59.8	61.4	63.2	68.2	57.4	60.9	29	4549	5049
	365T																										4610	5110
	404T									24 1/4		102			31		52		57.6	59.4	60.9	62.5	67.3	57.2	60.4	30	4915	5415
	405T																										5069	5569
	444T									25 1/4		114			35		63		67.3	68.8	70.1	71.5	75.6	67.0	69.7	34	5494	5994
	445T																										5581	6081
	447T									25 5/16		114			35		63		67.3	68.8	70.1	71.5	75.6	67.0	69.7	34	5713	6213
600	324T	54	57	61	65	73	52	64	8	20 11/16	89 5/8	102	25 3/4	34	32	87 1/8	54	7/8	63.4	65.1	67.4	69.9	75.2	62.4	71.8	32	5239	5886
	326T																										5304	5951
	364T									21 3/4		109			33		56		64.6	66.2	68.4	70.8	75.9	63.7	70.2	33	5455	6102
	365T																										5516	6163
	404T									24 1/4		112			34		57		64.3	65.7	67.8	70.1	75.0	63.4	69.5	35	5782	6429
	405T																										5883	6530
	444T									25 1/4		123			38		68		73.8	75.1	76.8	78.8	83.1	73.1	78.3	37	6188	6835
	445T																										6365	7012
	447T									25 5/16		123			38		68		73.8	75.1	76.8	78.8	83.1	73.1	78.3	37	6725	7372
660	324T	58	62	66	70	79	57	67	8	20 11/16	94 3/8	112	28 1/8	37	34	91 7/8	57	7/8	68.1	70.4	72.8	75.4	81.5	67.6	73.4	34	6228	6938
	326T																										6294	7004
	364T									21 3/4		115			35		59		69.5	71.7	74.1	76.5	82.6	69.0	74.7	35	6464	7174
	365T																										6525	7235
	404T									24 1/4		118			36		60		68.8	70.9	73.1	75.4	81.2	68.3	73.7	36	6823	7533
	405T																										6924	7634
	444T									25 1/4		132			41		73		80.0	81.7	83.6	85.6	90.6	79.6	84.1	40	7253	7963
	445T																										7430	8140
	447T									25 5/16		132			41		73		80.0	81.7	83.6	85.6	90.6	79.6	84.1	40	8014	8724

BCA/BCS-365 & 402
ARRANGEMENT 3
SWSI UNITARY

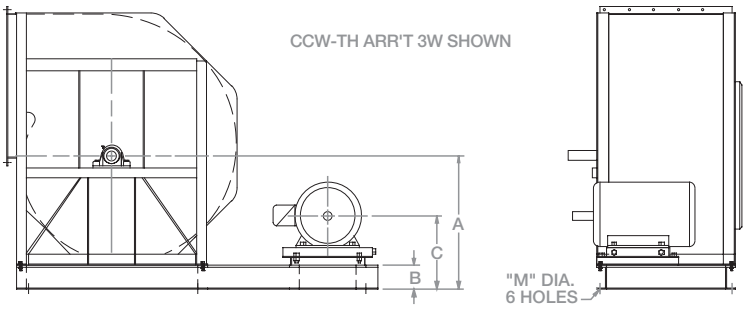

NOTES:
BELT C/D = "N" DIMENSION
ARR'T 3R UNITARY BASE
MOTOR POSITION "W"
CHANNEL: 6 x 2.497 x .310
6" - 12#
ARR'T 3W SHOWN,
ARR'T 3Z IS MIRROR IMAGE

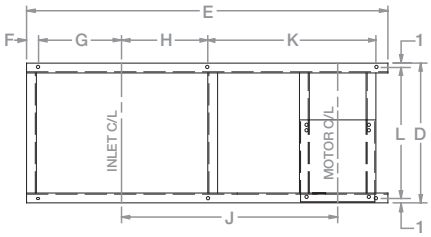

FOUNDATION PLAN

ALL DIMENSIONS SHOWN IN INCHES

		CW-TH CCW-TH	CW-TAU CCW-TAU	CW-UB CCW-UB	CW-BAU	CW-BH	CCW-TAD											CW-TH	CCW-TH	CW-TAU CCW-TAU	CW-UB CCW-UB	CW-BAU	CW-BH	CCW-TAD	APPROX. WT. FAN, MTR, UNIT	
FAN SIZE	FRAME SIZE	A	A	A	A	A	A	B	C	D	E	F	G	H	J	K	L	M	N	N	N	N	N	N	N	CLASS 1 & 2	CLASS 3
365	254T	34	36	39	41	46	39	6	16 7/16	35 3/8	85	3	21 1/4	18 1/4	50 7/8	39 1/2	33 3/8	7/8	53.8	53.8	54.5	55.7	56.5	58.8	55.7	1820	2042
	256T																									1850	2072
	284T								17 3/16		88			19 3/4	52 1/2	41			55.1	55.1	55.8	56.9	57.6	59.9	56.9	1965	2187
	286T																									2015	2237
	324T								18 11/16		92			21 3/4	54 7/8	43			57.0	57.0	57.5	58.5	592	61.3	58.5	2153	2375
	326T																									2218	2440
	364T								19 3/4		95			23 1/4	56 5/8	44 1/2			58.4	58.4	58.9	59.8	60.5	62.4	59.8	2382	2604
	365T																									2442	2664
	404T								22 1/4		100			25 3/4	59 3/8	47			N/A	60.5	60.9	61.7	62.3	63.9	61.7	2742	2964
	405T																									2842	3064
	444T								23 1/4		104			27 3/4	62 7/8	49			N/A	63.8	64.2	64.8	65.3	66.9	64.8	3135	3357
	445T																									3310	3532
402	254T	37	39	42	44	49	41	6	16 7/16	38 5/16	90	3	23 1/4	18 3/4	54 1/2	42	36 5/16	7/8	58.3	58.3	59.0	60.2	61.1	63.5	59.8	2120	2358
	256T																									2150	2388
	284T								17 3/16		93			20 1/4	56 1/8	43 1/2			59.5	59.5	60.2	61.4	62.2	64.5	61.0	2264	2502
	286T																									2314	2552
	324T								18 11/16		98			22 3/4	58 7/8	46			61.7	61.7	62.3	63.3	64.1	66.2	63.0	2455	2693
	326T																									2520	2758
	364T								19 3/4		100			23 3/4	60 3/8	47			62.8	62.8	63.4	63.3	65.1	67.1	64.0	2682	2920
	365T																									2742	2980
	404T								22 1/4		105			26 1/4	63	49 1/2			N/A	64.7	65.2	66.0	66.7	68.4	65.7	3041	3279
	405T																									3141	3379
	444T								23 1/4		110			28 3/4	66 1/2	52			N/A	67.9	68.3	69.1	69.7	71.3	68.8	3437	3675
	445T																									3612	3850

BCA/BCS-445 & 600
ARRANGEMENT 3
SWSI UNITARY

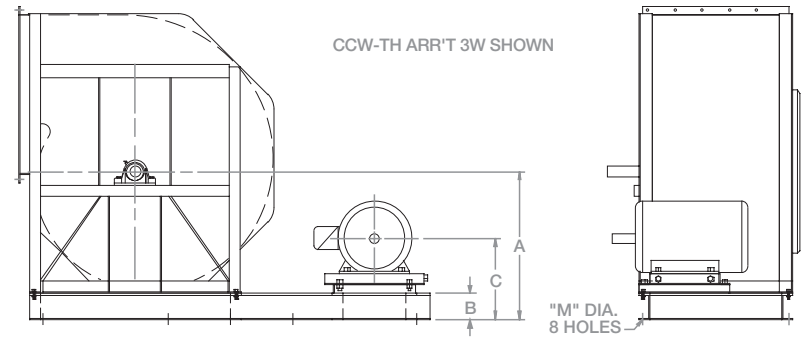

NOTES:
BELT C/D = "N" DIMENSION
ARR'T 3R UNITARY BASE
MOTOR POSITION "W"
CHANNEL: 8 x 2.978 x .353
8" - 18.7#
ARR'T 3W SHOWN,
ARR'T 3Z IS MIRROR IMAGE

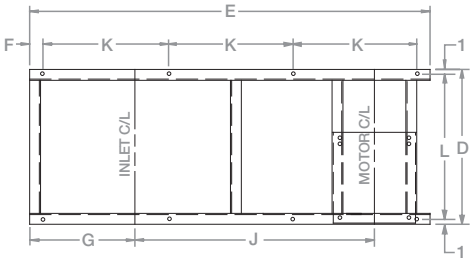

FOUNDATION PLAN

ALL DIMENSIONS SHOWN IN INCHES

		CW-TH CCW-TH	CW-TAU CCW-TAU	CW-UB CCW-UB	CW-BAU	CW-BH	CCW-TAD											CW-TH CCW-TH	CW-TAU CCW-TAU	CW-UB CCW-UB	CW-BAU	CW-BH	CCW-TAD	APPROX. WT. FAN, MTR, UNIT	
FAN SIZE	FRAME SIZE	A	A	A	A	A	A	B	C	D	E	F	G	J	K	L	M	N	N	N	N	N	N	CLASS 1 & 2	CLASS 3
445	324T	42	45	48	50	55	45	8	20 11/16	41 11/16	106	5	28 1/4	64 7/8	32	39 11/16	7/8	68.3	69.3	70.4	71.2	73.4	69.3	2915	3123
	326T																							2980	3188
	364T								21 3/4		109			66 1/2	33			69.5	70.5	71.5	72.3	74.4	70.5	3147	3355
	365T																							3207	3415
	404T								24 1/4		112			67 3/8	34			69.7	70.5	71.4	72.1	74.1	70.5	3506	3714
	405T																							3606	3814
	444T								25 1/4		115			70 3/4	35			72.7	73.5	74.3	75.0	76.8	73.5	3901	4109
	445T																							4076	4284
	447T								25 5/16		115			70 3/4	35			72.7	73.4	74.3	74.9	76.7	73.4	4640	4848
																								4640	4848
490	324T	45	48	51	54	62	52	8	20 11/16	45 1/4	112	5	32 1/2	67 1/4	34	43 1/4	7/8	70.9	72.6	73.2	75.1	78.9	74.2	3506	3888
	326T																							3571	3953
	364T								21 3/4		115			69	35			72.1	73.8	74.3	76.2	79.9	75.3	3738	4120
	365T																							3798	4180
	404T								24 1/4		121			72 1/8	37			75.1	75.9	76.9	78.0	81.4	77.3	4107	4489
	405T																							4207	4589
	444T								25 1/4		127			76 7/8	39			79.4	80.2	81.1	82.1	85.2	81.4	4511	4893
	445T																							4686	5068
	447T								25 5/16		127			76 7/8	39			79.4	80.2	81.1	82.1	85.2	81.4	5249	5631
																								5249	5631
542	324T	49	53	56	59	67	55	8	20 11/16	49 7/16	121	5	35	73 1/8	37	47 7/16	7/8	78.4	80.0	81.2	82.6	86.6	80.8	3964	4442
	326T																							4029	4507
	364T								21 3/4		124			74 3/4	38			79.6	81.0	82.2	83.5	87.4	81.8	4196	4674
	365T																							4256	4734
	404T								24 1/4		127			76 7/8	39			79.6	82.1	83.0	84.4	88.0	82.8	4555	5033
	405T																							4655	5133
	444T								25 1/4		133			80 3/8	41			83.8	85.0	86.1	87.2	90.6	85.7	4959	5437
	445T																							5134	5612
	447T								25 5/16		133			80 3/8	41			83.8	85.0	86.0	87.2	90.5	85.7	5698	6176
																								5698	6176
600	324T	54	57	61	65	73	64	8	20 11/16	54	127	5	40	74 1/8	39	52	7/8	81.3	82.5	84.4	86.4	90.7	85.5	4410	5004
	326T																							4476	5070
	364T								21 3/4		130			75 3/8	40			82.0	83.2	85.0	86.9	91.1	86.4	4642	5236
	365T																							4703	5297
	404T								24 1/4		133			77 7/8	41			83.4	84.5	86.1	87.9	91.8	87.4	5005	5599
	405T																							5106	5700
	444T								25 1/4		139			81 3/8	43			86.3	87.3	88.9	90.6	94.3	90.1	5411	6005
	445T																							5588	6182
	447T								25 5/16		139			81 3/8	43			86.3	87.3	88.9	90.6	94.3	90.1	5933	6527
																								5933	6527

QBCA/QBCS-122-200
ARRANGEMENT 1

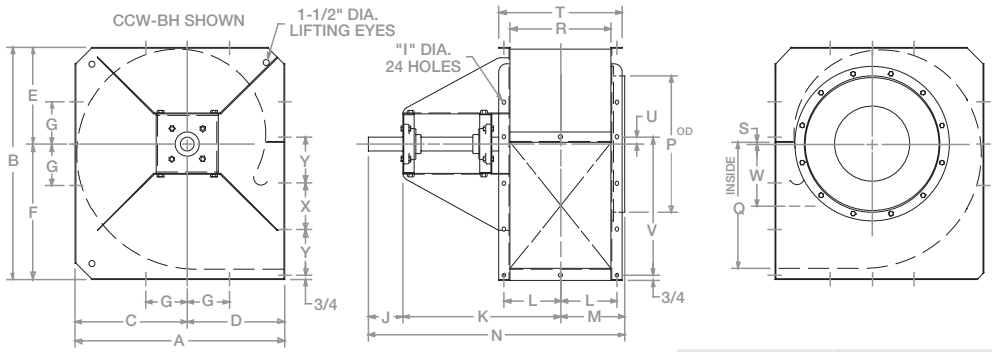

ALL DIMENSIONS SHOWN IN INCHES
*Fan weight is approximate

FAN SIZE	A	B	C	D	E	F	G	I	J	K	L	M	N	P	Q	R	S	T	U	V	W	X	Y	CLASS 1 & 2 SHAFT DIA	CLASS 1 & 2 KEY-WAY	CLASS 1 & 2 FAN WT* NO MOTOR	CLASS 3 SHAFT DIA	CLASS 3 KEY-WAY	CLASS 3 FAN WT* NO MOTOR
122	20 7/8	23	10 7/8	10	9 3/8	13 5/8	5 1/2	7/16	3 1/2	16 3/4	5 3/4	6 9/16	26 13/16	13 3/8	12 3/16	9 3/4	1/8	13	15/16	13 13/16	5 31/32	4 9/16	4 5/8	1 3/16	1/4 x 1/8	98	1 7/16	3/8 x 3/16	114
135	22 15/16	25 3/16	11 15/16	11	10 5/16	14 7/8	5 1/2	7/16	3 1/2	17 19/32	6 7/32	7 1/32	28 1/8	14 3/8	13 7/16	10 11/16	5/32	13 15/16	31/32	15 1/16	6 9/16	5 1/16	5	1 3/16	1/4 x 1/8	111	1 7/16	3/8 x 3/16	128
150	25 1/4	27 13/16	13 1/4	12	11 7/16	16 3/8	5 1/2	7/16	3 1/2	18 23/32	6 27/32	7 21/32	29 7/8	16 1/2	15	11 15/16	7/32	15 3/16	1 1/32	16 5/8	7 9/32	5 5/8	5 1/2	1 3/16	1/4 x 1/8	132	1 7/16	3/8 x 3/16	152
165	27 9/16	30 3/8	14 9/16	13	12 9/16	17 13/16	6 1/2	9/16	4	21 7/16	7 7/16	8 1/4	33 11/16	17 1/2	16 3/8	13 1/8	7/32	16 3/8	1 3/32	18 1/8	7 31/32	6 1/8	6	1 7/16	3/8 x 3/16	198	1 11/16	3/8 x 3/16	229
182	30 1/16	33 3/8	16 1/16	14	13 13/16	19 9/16	6 1/2	9/16	4	22 5/8	8 1/8	9	35 5/8	19 1/2	18 1/8	14 1/2	7/32	17 3/4	1 3/32	19 7/8	8 27/32	6 5/8	6 5/8	1 7/16	3/8 x 3/16	231	1 11/16	3/8 x 3/16	263
200	32 9/16	36 3/8	17 9/16	15	15 1/8	21 1/4	6 1/2	9/16	4	24 3/16	8 13/16	9 11/16	37 7/8	21 1/2	19 7/8	15 7/8	1/4	19 1/8	1 1/8	21 5/8	9 11/16	7 1/8	7 1/4	1 7/16	3/8 x 3/16	265	1 15/16	1/2 x 1/4	311

QBCA/QBCS-222-330
ARRANGEMENT 1

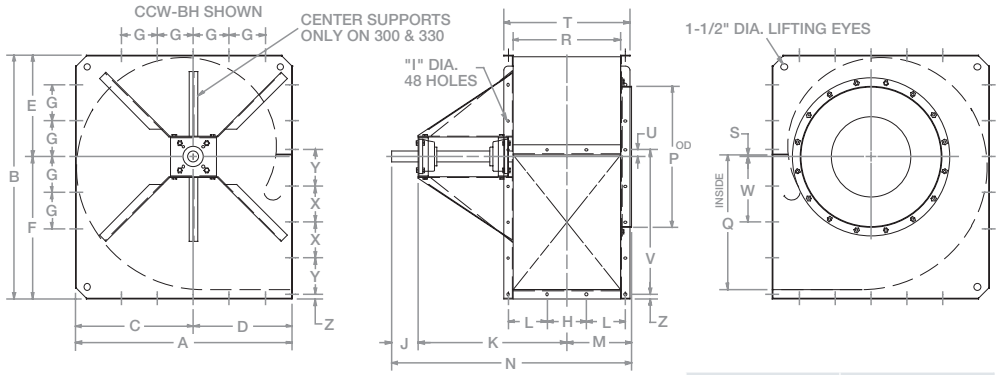

ALL DIMENSIONS SHOWN IN INCHES
*Fan weight is approximate

FAN SIZE	A	B	C	D	E	F	G	H	I	J	K	L	M	N	P	Q	R	S	T	U	V	W	X	Y	Z	CLASS 1 & 2 SHAFT DIA	CLASS 1 & 2 KEY-WAY	CLASS 1 & 2 FAN WT* NO MOTOR	CLASS 3 SHAFT DIA	CLASS 3 KEY-WAY	CLASS 3 FAN WT* NO MOTOR
222	35 1/2	40 5/16	19 1/2	16	16 13/16	23 1/2	6 1/2	6 7/16	9/16	5	26 7/32	6 1/2	10 19/32	41 13/16	23 1/2	22 1/8	17 11/16	9/32	20 15/16	1 5/32	23 7/8	10 25/32	6	5 15/16	3/4	1 11/16	3/8 x 3/16	337	1 15/16	1/2 x 1/4	380
245	39 1/2	44 3/4	21 1/2	18	18 1/2	26 1/4	6 1/2	7 3/16	9/16	5	27 19/32	7 1/4	11 31/32	44 9/16	26 1/2	24 7/16	19 7/16	1 1/32	23 11/16	1 15/32	26 11/16	11 7/8	6 23/32	6 5/8	1	1 11/16	3/8 x 3/16	408	2 3/16	1/2 x 1/4	473
270	43 1/8	49 1/16	23 5/8	19 1/2	20 3/8	28 11/16	6 1/2	7 15/16	9/16	6	29 11/32	7 7/8	12 31/32	48 5/16	28 1/2	26 15/16	21 7/16	1 3/32	25 11/16	1 17/32	29 3/16	13 1/16	7 11/32	7 1/4	1	1 11/16	3/8 x 3/16	469	2 3/16	1/2 x 1/4	542
300	48 1/4	54 1/4	26 1/4	22	22 5/8	31 5/8	8	8 11/16	9/16	6	33 1/32	8 11/16	14 5/32	53 3/16	31 1/2	29 15/16	23 13/16	7/16	28 1/16	1 9/16	32 3/16	14 17/32	7 31/32	8 1/8	1	1 15/16	1/2 x 1/4	634	2 7/16	5/8 x 5/16	727
330	52 13/16	59 3/8	28 13/16	24	24 13/16	34 9/16	8	9 7/16	9/16	6 1/2	36 7/32	9 1/2	15 11/32	58 1/16	34 1/2	33	26 3/16	17/32	30 7/16	1 21/32	35 1/4	15 31/32	8 13/16	8 13/16	1	2 3/16	1/2 x 1/4	772	2 11/16	5/8 x 5/16	954

QBCA/QBCS-365-445
ARRANGEMENT 1

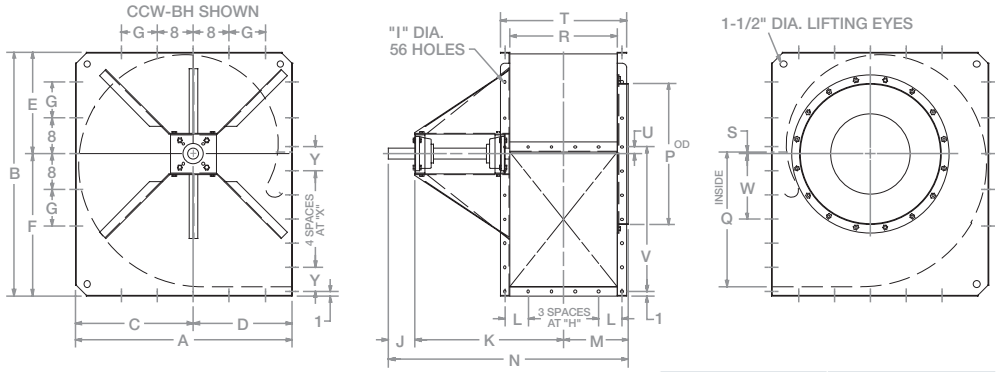

ALL DIMENSIONS SHOWN IN INCHES
*Fan weight is approximate

FAN SIZE	A	B	C	D	E	F	G	H	I	J	K	L	M	N	P	Q	R	S	T	U	V	W	X	Y	CLASS 1 & 2 SHAFT DIA	CLASS 1 & 2 KEY-WAY	CLASS 1 & 2 FAN WT* NO MOTOR	CLASS 3 SHAFT DIA	CLASS 3 KEY-WAY	CLASS 3 FAN WT* NO MOTOR
365	58 7/8	65 1/2	31 7/8	27	27 7/16	38 1/16	8	6 1/4	1 1/16	6 1/2	37 11/16	6 1/4	16 13/16	61	37 1/2	36 1/2	29	13/16	33 1/4	1 11/16	38 3/4	17 11/16	6 1/2	6 3/8	2 7/16	5/8 x 5/16	1057	2 11/16	5/8 x 5/16	1201
402	65 1/8	72	35 1/8	30	30 1/4	41 3/4	16	6 13/16	1 1/16	7	40 5/32	6 7/8	18 9/32	65 7/16	41 1/2	40 5/16	31 15/16	15/16	36 3/16	1 13/16	42 9/16	19 15/32	7 3/32	7 3/32	2 11/16	5/8 x 5/16	1332	2 15/16	3/4 x 3/8	1459
445	71 13/16	79 7/16	38 13/16	33	33 7/16	46	16	7 1/2	1 1/16	7	41 27/32	7 17/32	19 31/32	68 13/16	45 1/2	44 9/16	35 5/16	31/32	39 9/16	1 27/32	46 13/16	21 9/16	7 13/16	7 25/32	2 11/16	5/8 x 5/16	1543	2 15/16	3/4 x 3/8	1699

QBCA/QBCS-122-200
ARRANGEMENT 9

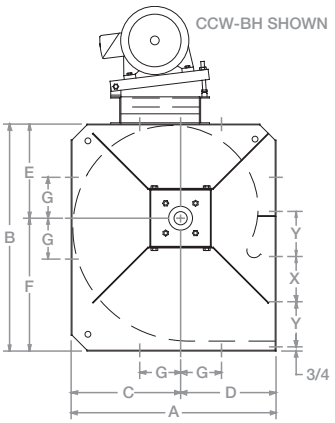

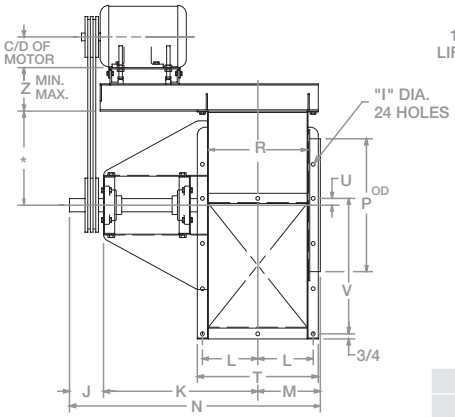

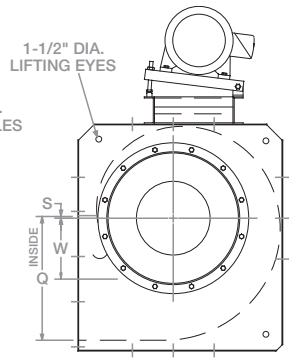

* "C", "E", OR "F" DEPENDING ON FAN DISCHARGE

FAN SIZE	APPROX. FAN WEIGHT NO MOTOR — CLASS 1 & 2 — SHAFT DIA	KEY-WAY	WITH STD. MOTOR BASE	WITH H.D. MOTOR BASE	CLASS 3 — SHAFT DIA	KEY-WAY	WITH H.D. MOTOR BASE	WITH STD. MOTOR BASE
122	1 3/16	1/4 x 1/8	124	134	1 7/16	3/8 x 3/16	140	150
135	1 3/16	1/4 x 1/8	138	148	1 7/16	3/8 x 3/16	155	165
150	1 3/16	1/4 x 1/8	160	170	1 7/16	3/8 x 3/16	180	190
165	1 7/16	3/8 x 3/16	230	263	1 11/16	3/8 x 3/16	261	294
182	1 7/16	3/8 x 3/16	264	297	1 11/16	3/8 x 3/16	296	329
200	1 7/16	3/8 x 3/16	299	333	1 11/16	1/2 x 1/4	345	379

APPROX. MOTOR WEIGHT — FRAME SIZE	WEIGHT LBS.
48	25
56	34
143T	45
145T	52
182T	85
184T	100
213T	150
215T	170
254T	260
256T	290
284T	390
286T	440

ALL DIMENSIONS SHOWN IN INCHES

FAN SIZE	A	B	C	D	E	F	G	I	J	K	L	M	N	P	Q	R	S	T	U	V	W	X	Y	STD. MOTOR BASE MIN. Z	STD. MOTOR BASE MAX. Z	STD. MOTOR BASE FRAME SIZES RANGE	H.D. MOTOR BASE MIN. Z	H.D. MOTOR BASE MAX. Z	H.D. MOTOR BASE FRAME SIZES RANGE
122	20 7/8	23	10 7/8	10	9 3/8	13 5/8	5 1/2	7/16	3 1/2	16 3/4	5 3/4	6 9/16	26 13/16	13 3/8	12 3/16	9 3/4	1/8	13	15/16	13 13/16	5 31/32	4 9/16	4 5/8	5 1/4	7 1/4	48-213T	6 1/4	8 1/4	182T-256T
135	22 15/16	25 3/16	11 15/16	11	10 5/16	14 7/8	5 1/2	7/16	3 1/2	17 19/32	6 7/32	7 1/32	28 1/8	14 3/8	13 7/16	10 11/16	5/32	13 15/16	31/32	15 1/16	6 9/16	5 1/16	5	5 1/4	7 1/4	48-213T	6 1/4	8 1/4	182T-256T
150	25 1/4	27 13/16	13 1/4	12	11 7/16	16 3/8	5 1/2	7/16	3 1/2	18 23/32	6 27/32	7 21/32	29 7/8	16 1/2	15	11 15/16	7/32	15 3/16	1 1/32	16 5/8	7 9/32	5 5/8	5 1/2	5 1/4	7 1/4	48-213T	6 1/4	8 1/4	182T-256T
165	27 9/16	30 3/8	14 9/16	13	12 9/16	17 13/16	6 1/2	9/16	4	21 7/16	7 7/16	8 1/4	33 11/16	17 1/2	16 3/8	13 1/8	7/32	16 3/8	1 3/32	18 1/8	7 31/32	6 1/8	6	6 1/4	8 1/4	56-215T	8 1/4	10	143T-286T
182	30 1/16	33 3/8	16 1/16	14	13 13/16	19 9/16	6 1/2	9/16	4	22 5/8	8 1/8	9	35 5/8	19 1/2	18 1/8	14 1/2	7/32	17 3/4	1 3/32	19 7/8	8 27/32	6 5/8	6 5/8	6 1/4	8 1/4	56-215T	8 1/4	10	143T-286T
200	32 9/16	36 3/8	17 9/16	15	15 1/8	21 1/4	6 1/2	9/16	4	24 3/16	8 13/16	9 11/16	37 7/8	21 1/2	19 7/8	15 7/8	1/4	19 1/8	1 1/8	21 5/8	9 11/16	7 1/8	7 1/4	6 1/4	8 1/4	56-215T	8 1/4	10	143T-286T

QBCA/QBCS-222-330
ARRANGEMENT 9

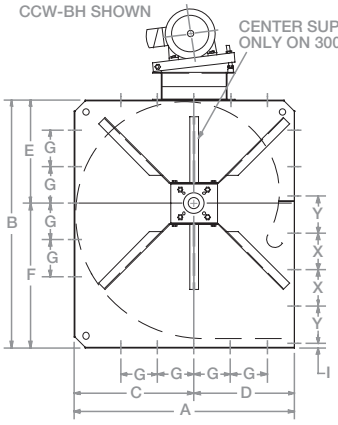

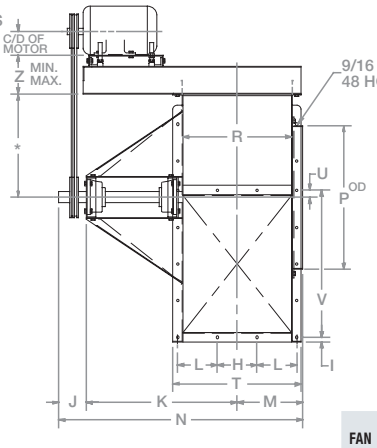

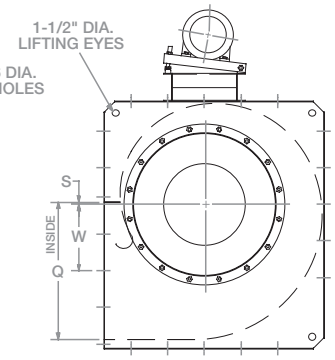

* "C", "E", OR "F" DEPENDING ON FAN DISCHARGE

FAN SIZE	APPROX. FAN WEIGHT NO MOTOR — CLASS 1 & 2 — SHAFT DIA	KEY-WAY	WITH STD. MOTOR BASE	WITH H.D. MOTOR BASE	CLASS 3 — SHAFT DIA	KEY-WAY	WITH H.D. MOTOR BASE	WITH STD. MOTOR BASE
222	1 1/16	3/8 x 3/16	380	408	1 15/16	1/2 x 1/4	423	451
245	1 1/16	3/8 x 3/16	452	497	2 3/16	1/2 x 1/4	517	562
270	1 1/16	3/8 x 3/16	515	560	2 3/16	1/2 x 1/4	588	633
300	1 15/16	1/2 x 1/4	715	747	2 7/16	5/8 x 5/16	808	840
330	2 3/16	1/2 x 1/4	857	926	2 11/16	5/8 x 5/16	1039	1108

APPROX. MOTOR WEIGHT — FRAME SIZE	WEIGHT LBS.
143T	45
145T	52
182T	85
184T	100
213T	150
215T	170
254T	260
256T	290
284T	390
286T	440
324T	555
326T	620

ALL DIMENSIONS SHOWN IN INCHES

FAN SIZE	A	B	C	D	E	F	G	H	I	J	K	L	M	N	P	Q	R	S	T	U	V	W	X	Y	STD. MOTOR BASE MIN. Z	STD. MOTOR BASE MAX. Z	STD. MOTOR BASE FRAME SIZES RANGE	H.D. MOTOR BASE MIN. Z	H.D. MOTOR BASE MAX. Z	H.D. MOTOR BASE FRAME SIZES RANGE
222	35 1/2	40 5/16	19 1/2	16	16 13/16	23 1/2	6 1/2	6 7/16	3/4	5	26 7/32	6 1/2	10 19/32	41 13/16	23 1/2	22 1/8	17 11/16	9/32	20 15/16	1 5/32	23 7/8	10 25/32	6	5 15/16	6 1/4	8 1/4	182T-256T	8 1/4	10	143T-286T
245	39 1/2	44 3/4	21 1/2	18	18 1/2	26 1/4	6 1/2	7 3/16	1	5	27 19/32	7 1/4	11 31/32	44 9/16	26 1/2	24 7/16	19 7/16	11/32	23 11/16	1 15/32	26 11/16	11 7/8	6 23/32	6 5/8	6 1/4	8 1/4	182T-256T	10 1/4	12	143T-326T
270	43 1/8	49 1/16	23 5/8	19 1/2	20 3/8	28 11/16	6 1/2	7 15/16	1	6	29 11/32	7 7/8	12 31/32	48 5/16	28 1/2	26 15/16	21 7/16	13/32	25 11/16	1 17/32	29 3/16	13 1/16	7 11/32	7 1/4	6 1/4	8 1/4	182T-256T	10 1/4	12	143T-326T
300	48 1/4	54 1/4	26 1/4	22	22 5/8	31 5/8	8	8 11/16	1	6	33 1/32	8 11/16	14 5/32	53 3/16	31 1/2	29 15/16	23 13/16	7/16	28 1/16	1 9/16	32 3/16	14 17/32	7 31/32	8 1/8	8 1/4	10	143T-286T	10 1/4	12	143T-326T
330	52 13/16	59 3/8	28 13/16	24	24 13/16	34 9/16	8	9 7/16	1	6 1/2	36 7/32	9 1/2	15 11/32	58 1/16	34 1/2	33	26 3/16	17/32	30 7/16	1 21/32	35 1/4	15 31/32	8 13/16	8 13/16	8 1/4	10	143T-286T	10 1/4	12	143T-326T

QBCA/QBCS-365-445
ARRANGEMENT 9

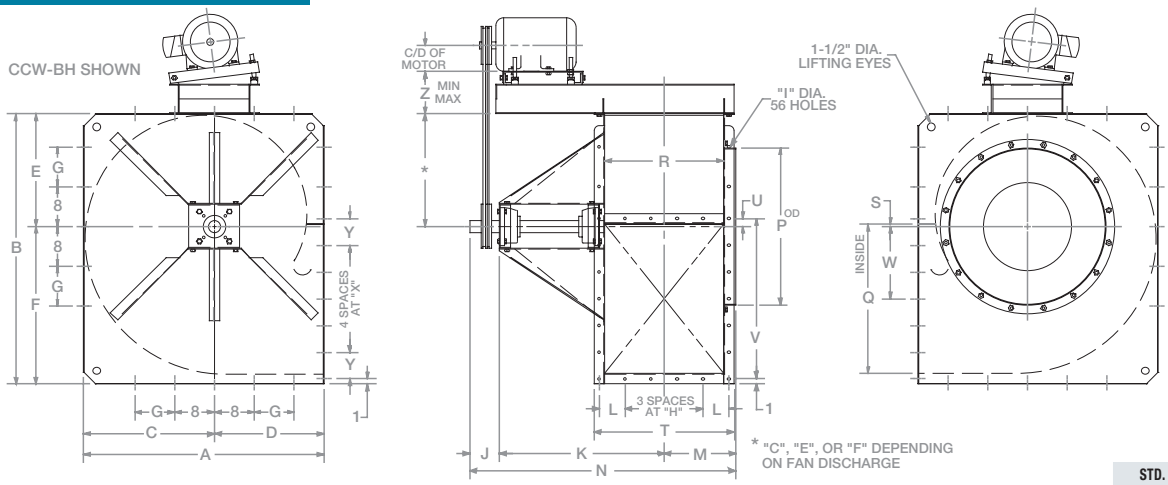

APPROX. MOTOR WEIGHT	
FRAME SIZE	WEIGHT LBS.
143T	45
145T	52
182T	85
184T	100
213T	150
215T	170
254T	260
256T	290
284T	390
286T	440
324T	555
326T	620

FAN SIZE	A	B	C	D	E	F	G	H	I	J	K	L	M	N	P	Q	R	S	T	U	V	W	X	Y	STD. MOTOR BASE MIN. Z	STD. MOTOR BASE MAX. Z	STD. MOTOR BASE FRAME SIZES RANGE	H.D. MOTOR BASE MIN. Z	H.D. MOTOR BASE MAX. Z	H.D. MOTOR BASE FRAME SIZES RANGE
365	58⅞	65½	31⅞	27	27 7/16	38 1/16	8	6¼	1 1/16	6½	37 11/16	6¼	16 13/16	61	37½	36½	29	1 3/16	33¼	1 11/16	38¾	17 11/16	6½	6⅜	8¼	10	143T-286T	10¼	12	143T-326T
402	65⅛	72	35⅛	30	30¼	41¾	16	6 13/16	1 1/16	7	40 5/32	6⅞	18 9/32	65 7/16	41½	40 5/16	31 15/16	1 5/16	36 3/16	1 13/16	42 9/16	19 15/32	7 3/32	7 3/32	8¼	10	143T-286T	10¼	12	143T-326T
445	71 13/16	79 7/16	38 13/16	33	33 7/16	46	16	7½	1 1/16	7	41 27/32	7 17/32	19 31/32	68 13/16	45½	44 9/16	35 5/16	31/32	39 9/16	1 27/32	46 13/16	21 9/16	7 13/16	7 25/32	8¼	10	143T-286T	10¼	12	143T-326T

ALL DIMENSIONS SHOWN IN INCHES

	APPROX. FAN WEIGHT NO MOTOR							
	CLASS 1 & 2				CLASS 3			
FAN SIZE	SHAFT DIA	KEY-WAY	WITH STD. MOTOR BASE	WITH H.D. MOTOR BASE	SHAFT DIA	KEY-WAY	WITH STD. MOTOR BASE	WITH H.D. MOTOR BASE
365	2 7/16	⅝ x 5/16	1145	1215	2 11/16	⅝ x 5/16	1289	1359
402	2 11/16	⅝ x 5/16	1424	1496	2 15/16	¾ x ⅜	1551	1623
445	2 11/16	⅝ x 5/16	1638	1713	2 15/16	¾ x ⅜	1794	1869

QBCA/QBCS-122-200
ARRANGEMENT 4

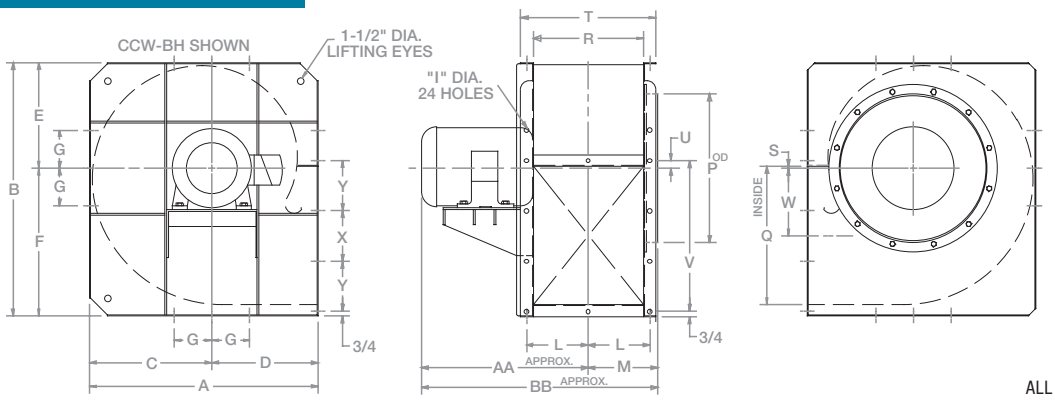

APPROX. MOTOR WEIGHT	
FRAME SIZE	WEIGHT LBS.
56	34
143T	45
145T	52
182T	85
184T	100
213T	150
215T	170
254T	260
256T	290

ALL DIMENSIONS SHOWN IN INCHES

FAN SIZE	A	B	C	D	E	F	G	I	L	M	P	Q	R	S	T	U	V	W	X	Y
122	20⅞	23	10⅞	10	9⅜	13⅝	5½	7/16	5¾	6 9/16	13⅜	12 3/16	9¾	⅛	13	15/16	13 13/16	5 31/32	4 9/16	4⅝
135	22 15/16	25 3/16	11 15/16	11	10 5/16	14⅞	5½	7/16	6 7/32	7 1/32	14⅜	13 7/16	10 11/16	5/32	13 15/16	3/32	15 1/16	6 9/16	5 1/16	5
150	25¼	27 13/16	13¼	12	11 7/16	16⅜	5½	7/16	6 27/32	7 21/32	16½	15	11 15/16	7/32	15 3/16	1 1/32	16⅝	7 9/32	5⅝	5½
165	27 9/16	30⅜	14 9/16	13	12 9/16	17 13/16	6½	9/16	7 7/16	8¼	17½	16⅜	13⅛	7/32	16⅜	1 3/32	18⅛	7 31/32	6⅛	6
182	30 1/16	33⅜	16 1/16	14	13 13/16	19 9/16	6½	9/16	8⅛	9	19½	18⅛	14½	7/32	17¾	1 3/32	19⅞	8 27/32	6⅝	6⅝
200	32 9/16	36⅜	17 9/16	15	15⅛	21¼	6½	9/16	8 13/16	9 11/16	21½	19⅞	15⅞	¼	19⅛	1⅛	21⅝	9 11/16	7⅛	7¼

	MOTOR FRAME SIZES																	
	56		143T		145T		182T		184T		213T		215T		254T		256T	
FAN SIZE	AA	BB	AA	BB	AA	BB	AA	BB	AA	BB	AA	BB	AA	BB	AA	BB	AA	BB
122	15½	22 1/16	14 11/16	21¼	15 11/16	22¼	16⅝	23 3/16	17⅝	24 3/16	19¼	25 13/16	20 13/16	27⅜	N/A		N/A	
135	16	23 1/32	15 3/16	22 7/32	16 3/16	23 7/32	17 1/16	24 3/32	18 1/16	25 3/32	19¾	26 25/32	21¼	28 9/32	N/A		N/A	
150	16⅝	24 9/32	15 13/16	23 15/32	16 13/16	24 15/32	17 11/16	25 11/16	18 11/16	26 11/16	20⅜	28 1/32	21⅞	29 17/32	N/A		N/A	
165	17 3/16	25 7/16	16⅜	24⅝	17⅜	25⅝	18 5/16	26 9/16	19 5/16	27 9/16	21	29¼	22½	30¾	25¼	33½	27	35¼
182	17⅞	26⅞	17 1/16	26 1/16	18 1/16	27 1/16	19	28	20	29	21 11/16	30 11/16	23 3/16	32 3/16	25 15/16	34 15/16	27 11/16	36 11/16
200	18 9/16	28¼	17¾	27 7/16	18¾	28 7/16	19 11/16	29⅜	20 11/16	30⅜	22⅜	32 1/16	23⅞	33 9/16	26⅝	36 5/16	28⅜	38⅛

	APPROX. FAN WEIGHT NO MOTOR							
	56/143/145T		182/184T		213/215T		254/256T	
FAN SIZE	CLASS 1 & 2	CLASS 3	CLASS 1 & 2	CLASS 3	CLASS 1 & 2	CLASS 3	CLASS 1 & 2	CLASS 3
122	97	110	99	112	104	116	N/A	
135	108	117	109	120	114	123	N/A	
150	128	140	129	141	134	146	N/A	
165	177	192	178	193	183	198	199	214
182	207	223	209	224	213	229	229	245
200	237	258	239	260	244	264	259	280

QBCA/QBCS-222-330
ARRANGEMENT 4

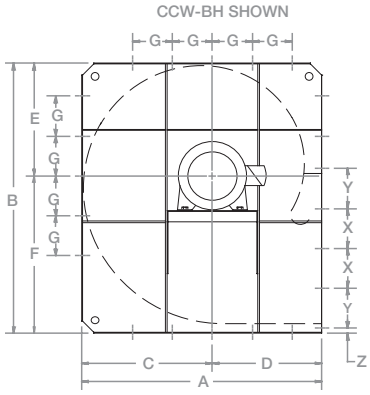

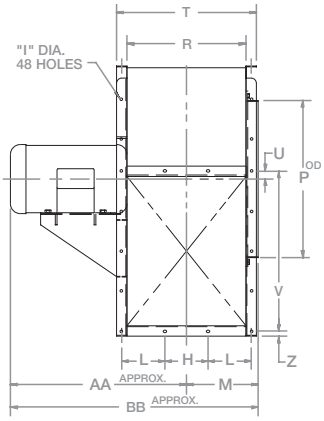

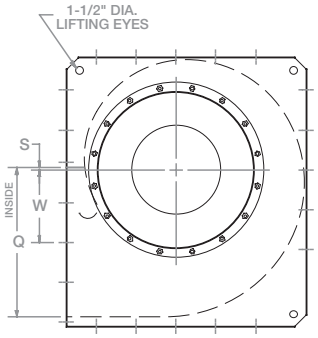

ALL DIMENSIONS SHOWN IN INCHES

FAN SIZE	A	B	C	D	E	F	G	H	I	L	M	P	Q	R	S	T	U	V	W	X	Y	Z
222	35½	40 5/16	19½	16	16 13/16	23½	6½	6 7/16	9/16	6½	10 19/32	23½	22⅛	17 11/16	9/32	20 15/16	1 5/32	23⅞	10 25/32	6	5 15/16	¾
245	39½	44¾	21½	18	18½	26¼	6½	7 3/16	9/16	7¼	11 31/32	26½	24 7/16	19 7/16	11/32	23 11/16	1 15/32	26 11/16	11⅞	6 23/32	6⅝	1
270	43⅛	49 1/16	23⅝	19½	20⅜	28 11/16	6½	7 15/16	9/16	7⅞	12 31/32	28½	26 15/16	21 7/16	13/32	25 11/16	1 17/32	29 3/16	13 1/16	7 11/32	7¼	1
300	48¼	54¼	26¼	22	22⅝	31⅝	8	8 11/16	9/16	8 11/16	14 5/32	31½	29 15/16	23 13/16	7/16	28 1/16	1 9/16	32 3/16	14 17/32	7 31/32	8⅛	1
330	52 13/16	59⅜	28 13/16	24	24 13/16	34 9/16	8	9 7/16	9/16	9½	15 11/32	34½	33	26 3/16	17/32	30 7/16	1 21/32	35¼	15 31/32	8 13/16	8 13/16	1

APPROX. MOTOR WEIGHT	
FRAME SIZE	WEIGHT LBS.
182T	85
184T	100
213T	150
215T	170
254T	260
256T	290
284T	390
286T	440
324T	555
326T	620

	MOTOR FRAME SIZES																			
	182T		184T		213T		215T		254T		256T		284T		286T		324T		326T	
FAN SIZE	AA	BB	AA	BB	AA	BB	AA	BB	AA	BB	AA	BB	AA	BB	AA	BB	AA	BB	AA	BB
222	20 9/16	31 5/32	21 9/16	32 5/32	23¼	33 27/32	24¾	35 11/32	27 17/32	38⅛	29 9/32	39⅞	N/A		N/A		N/A		N/A	
245	21 7/16	33 13/32	22 7/16	34 13/32	24⅛	36 3/32	25⅝	37 19/32	28 13/32	40⅜	30 5/32	42⅛	N/A		N/A		N/A		N/A	
270	22 7/16	34 13/32	23 7/16	36 13/32	25⅛	38 3/32	26⅝	39 19/32	29 13/32	42⅜	31 5/32	44⅛	32 27/32	45 13/16	34 11/32	47 5/16	N/A		N/A	
300	N/A		N/A		26 5/16	40 15/32	27 13/16	41 31/32	30 19/32	44¾	32 11/32	46½	34 1/32	48 3/16	35 17/32	49 11/16	36 13/32	50 9/16	37 29/32	52 1/16
330	N/A		N/A		27½	42 27/32	29	44 11/32	31 25/32	47⅛	33 17/32	48⅞	35 7/32	50 9/16	36 23/32	52 1/16	37 19/32	52 15/16	39 3/32	54 7/16

	APPROX. FAN WEIGHT NO MOTOR									
	182/184T		213/215T		254/256T		284/286T		324/326T	
FAN SIZE	CLASS 1 & 2	CLASS 3	CLASS 1 & 2	CLASS 3	CLASS 1 & 2	CLASS 3	CLASS 1 & 2	CLASS 3	CLASS 1 & 2	CLASS 3
222	295	321	300	326	315	341	N/A		N/A	
245	363	395	367	400	383	416	N/A		N/A	
270	419	459	424	464	440	480	447	487	N/A	
300	N/A		530	582	546	598	553	605	561	613
330	N/A		629	750	645	766	652	773	661	781

QBCA/QBCS-365-402
ARRANGEMENT 4

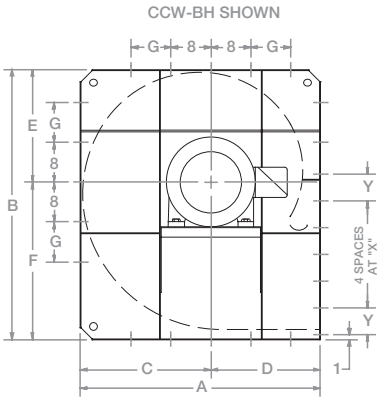

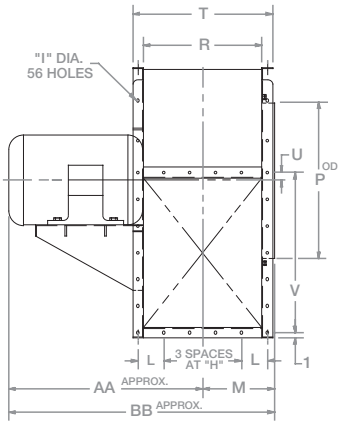

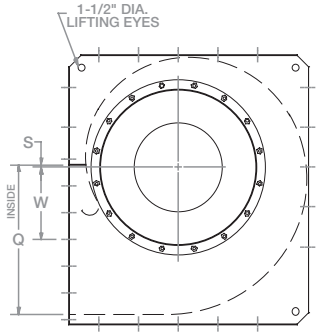

ALL DIMENSIONS SHOWN IN INCHES

FAN SIZE	A	B	C	D	E	F	G	H	I	L	M	P	Q	R	S	T	U	V	W	X	Y
365	58⅞	65½	31⅞	27	27 7/16	38 1/16	8	6¼	1 1/16	6¼	16 13/16	37½	36½	29	13/16	33¼	1 11/16	38¾	17 11/16	6½	6⅜
402	65⅛	72	35⅛	30	30¼	41¾	16	6 13/16	1 1/16	6⅞	18 9/32	41½	40 5/16	31 15/16	15/16	36 3/16	1 13/16	42 9/16	19 15/32	7 3/32	7 3/32

APPROX. MOTOR WEIGHT	
FRAME SIZE	WEIGHT LBS.
213T	150
215T	170
254T	260
256T	290
284T	390
286T	440
324T	555
326T	620

	MOTOR FRAME SIZES															
	213T		215T		254T		256T		284T		286T		324T		326T	
FAN SIZE	AA	BB	AA	BB	AA	BB	AA	BB	AA	BB	AA	BB	AA	BB	AA	BB
365	28⅞	45 1/16	30⅜	47 3/16	33 3/16	50	34 15/16	51¾	36⅝	53 7/16	38⅛	54 15/16	39	55 13/16	40½	57 5/16
402	N/A				34 21/32	52 15/16	36 13/32	54 11/16	38 3/32	56⅜	39 19/32	57⅞	40 15/32	58¾	41 31/32	60¼

	APPROX. FAN WEIGHT NO MOTOR							
	213/215T		254/256T		284/286T		324/326T	
FAN SIZE	CLASS 1 & 2	CLASS 3	CLASS 1 & 2	CLASS 3	CLASS 1 & 2	CLASS 3	CLASS 1 & 2	CLASS 3
365	890	993	906	1009	913	1016	921	1024
402	N/A		1110	1233	1117	1240	1126	1249

QBCA/QBCS-122-200
ARRANGEMENT 3 SWSI

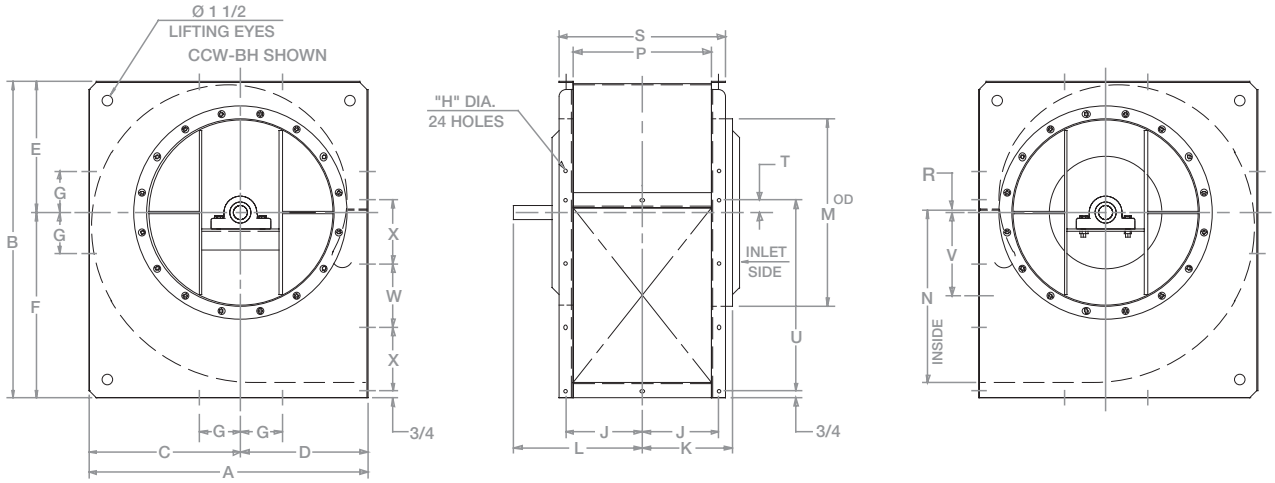

ALL DIMENSIONS SHOWN IN INCHES
*Fan weight is approximate

FAN SIZE	A	B	C	D	E	F	G	H	J	K	L	M	N	P	R	S	T	U	V	W	X	CLASS 1 & 2 SHAFT DIA	CLASS 1 & 2 KEY-WAY	CLASS 1 & 2 FAN WT* NO MOTOR	CLASS 3 SHAFT DIA	CLASS 3 KEY-WAY	CLASS 3 FAN WT* NO MOTOR
122	20 7/8	23	10 7/8	10	9 3/8	13 5/8	5 1/2	7/16	5 3/4	6 9/16	11	13 3/8	12 3/16	9 3/4	1/8	13	1 5/16	13 13/16	5 31/32	4 9/16	4 5/8	1 3/16	1/4 x 1/8	96	1 7/16	3/8 x 3/16	110
135	22 15/16	25 3/16	11 15/16	11	10 5/16	14 7/8	5 1/2	7/16	6 7/32	7 1/32	11 15/32	14 3/8	13 7/16	10 11/16	5/32	13 15/16	31/32	15 1/16	6 9/16	5 1/16	5	1 3/16	1/4 x 1/8	110	1 7/16	3/8 x 3/16	124
150	25 1/4	27 13/16	13 1/4	12	11 7/16	16 3/8	5 1/2	7/16	6 27/32	7 21/32	12 3/32	16 1/2	15	11 15/16	7/32	15 3/16	1 1/32	16 5/8	7 9/32	5 5/8	5 1/2	1 3/16	1/4 x 1/8	132	1 7/16	3/8 x 3/16	150
165	27 9/16	30 3/8	14 9/16	13	12 9/16	17 13/16	6 1/2	9/16	7 7/16	8 1/4	13 3/16	17 1/2	16 3/8	13 1/8	7/32	16 3/8	1 3/32	18 1/8	7 31/32	6 1/8	6	1 7/16	3/8 x 3/16	194	1 11/16	3/8 x 3/16	218
182	30 1/16	33 3/8	16 1/16	14	13 13/16	19 9/16	6 1/2	9/16	8 1/8	9	13 7/8	19 1/2	18 1/8	14 1/2	7/32	17 3/4	1 3/32	19 7/8	8 27/32	6 5/8	6 5/8	1 7/16	3/8 x 3/16	226	1 11/16	3/8 x 3/16	252
200	32 9/16	36 3/8	17 9/16	15	15 1/8	21 1/4	6 1/2	9/16	8 13/16	9 11/16	14 9/16	21 1/2	19 7/8	15 7/8	1/4	19 1/8	1 1/8	21 5/8	9 11/16	7 1/8	7 1/4	1 7/16	3/8 x 3/16	262	1 11/16	3/8 x 3/16	290

QBCA/QBCS-222-330
ARRANGEMENT 3 SWSI

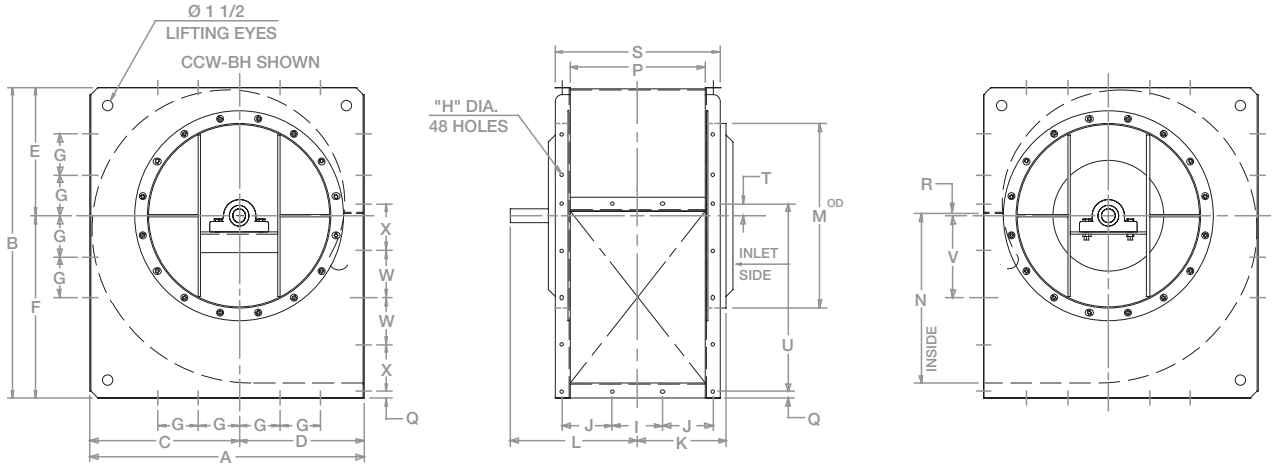

ALL DIMENSIONS SHOWN IN INCHES

FAN SIZE	A	B	C	D	E	F	G	H	I	J	K	L	M	N	P	Q	R	S	T	U	V	W	X	APPROX. WT. NO MOTOR CLASS 1 & 2	APPROX. WT. NO MOTOR CLASS 3
222	35 1/2	40 5/16	19 1/2	16	16 13/16	23 1/2	6 1/2	9/16	6 7/16	6 1/2	10 19/32	16 15/32	23 1/2	22 1/8	17 11/16	3/4	9/32	20 15/16	1 5/32	23 7/8	10 25/32	6	5 15/16	358	394
245	39 1/2	44 3/4	21 1/2	18	18 1/2	26 1/4	6 1/2	9/16	7 3/16	7 1/4	11 31/32	17 27/32	26 1/2	24 7/16	19 7/16	1	11/32	23 11/16	1 5/32	26 11/16	11 7/8	6 23/32	6 5/8	438	482
270	43 1/8	49 1/16	23 5/8	19 1/2	20 3/8	28 11/16	6 1/2	9/16	7 15/16	7 7/8	12 31/32	19 27/32	28 1/2	26 15/16	21 7/16	1	13/32	25 11/16	1 7/32	29 3/16	13 1/16	7 11/32	7 1/4	482	556
300	48 1/4	54 1/4	26 1/4	22	22 5/8	31 5/8	8	9/16	8 11/16	8 11/16	14 5/32	21 1/32	31 1/2	29 15/16	23 13/16	1	7/16	28 1/16	1 9/16	32 3/16	14 17/32	7 31/32	8 1/8	660	732
330	52 13/16	59 3/8	28 13/16	24	24 13/16	34 9/16	8	9/16	9 7/16	9 1/2	15 11/32	22 23/32	34 1/2	33	26 3/16	1	17/32	30 7/16	1 21/32	35 1/4	15 31/32	8 13/16	8 13/16	778	922

FAN SIZE	CLASS 1 & 2 SHAFT DIA.	CLASS 1 & 2 KEYWAY	CLASS 3* SHAFT DIA. BETWEEN BRGS.	CLASS 3* KEYWAY	CLASS 3* SHAFT DIA. BETWEEN BRGS.	CLASS 3* KEYWAY
222	1 11/16	3/8 x 3/16	1 5/16	1/2 x 1/4	1 11/16	3/8 x 3/16
245	1 11/16	3/8 x 3/16	1 5/16	1/2 x 1/4	1 11/16	3/8 x 3/16
270	1 11/16	3/8 x 3/16	1 5/16	1/2 x 1/4	1 11/16	3/8 x 3/16
300	1 5/16	1/2 x 1/4	2 3/16	1/2 x 1/4	1 5/16	1/2 x 1/4
330	1 5/16	1/2 x 1/4	2 3/16	1/2 x 1/4	2 3/16	1/2 x 1/4

*Note: Sizes 222 thru 300 have a turned down shaft thru bearings

QBCA/QBCS-365-445
ARRANGEMENT 3 SWSI

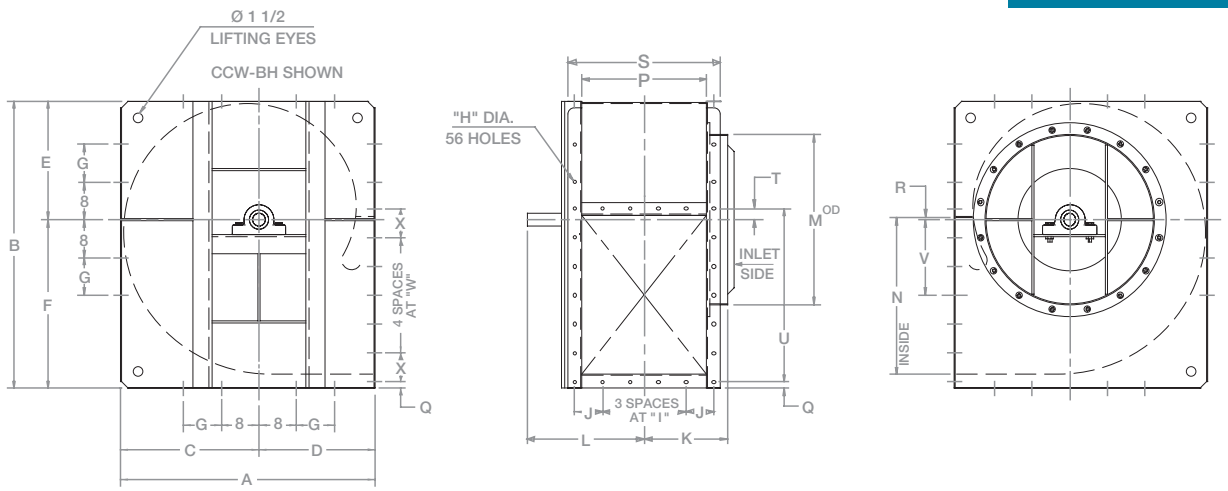

ALL DIMENSIONS SHOWN IN INCHES
*Fan weight is approximate

																								CLASS 1 & 2			CLASS 3		
FAN SIZE	A	B	C	D	E	F	G	H	I	J	K	L	M	N	P	Q	R	S	T	U	V	W	X	SHAFT DIA	KEY-WAY	FAN WT* NO MOTOR	SHAFT DIA	KEY-WAY	FAN WT* NO MOTOR
365	58⅞	65½	31⅞	27	27 7/16	38 1/16	8	1 1/16	6¼	6¼	16 13/16	24 3/16	37½	36½	29	1	13/16	33¼	1 11/16	38¾	17 11/16	6½	6⅜	2 3/16	½ x ¼	1078	2 7/16	⅝ x 5/16	1156
402	65⅛	72	35⅛	30	30¼	41¾	16	1 1/16	6 13/16	6⅞	18 9/32	26 3/16	41½	40 5/16	31 15/16	1	15/16	36 3/16	1 13/16	42 9/16	19 15/32	7 3/32	7 3/32	2 3/16	½ x ¼	1308	2 7/16	⅝ x 5/16	1464
445	71 13/16	79 7/16	38 13/16	33	33 7/16	46	16	1 1/16	7½	7 17/32	19 31/32	27⅞	45½	44 9/16	35 5/16	1	31/32	39 9/16	1 27/32	46 13/16	21 9/16	7 13/16	7 25/32	2 7/16	⅝ x 5/16	1562	2 11/16	⅝ x 5/16	1748

QBCS/QBCA-122-200
ARRANGEMENT 3T SWSI

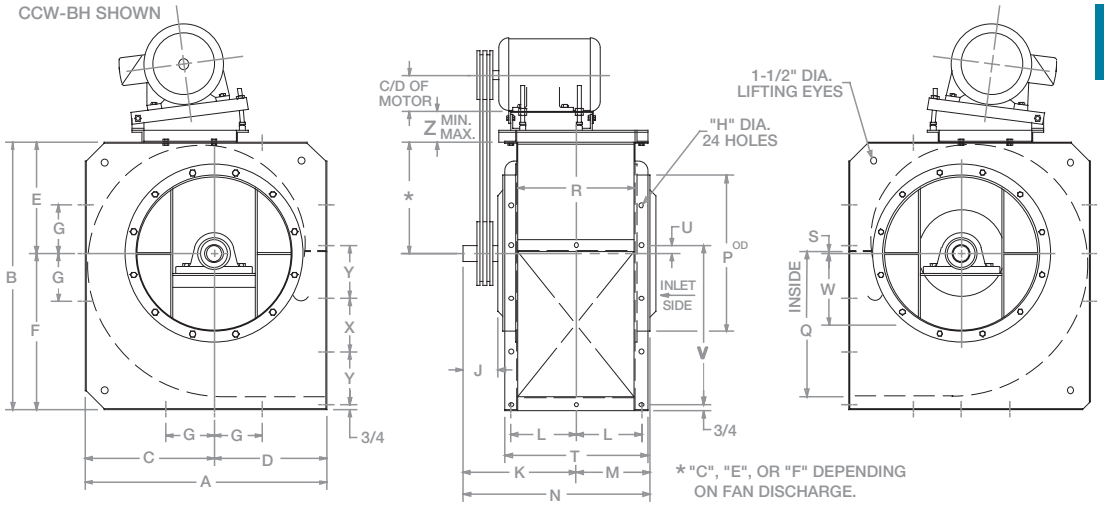

APPROX. MOTOR WEIGHT	
FRAME SIZE	WEIGHT LBS.
48	25
56	34
143T	45
145T	52
182T	85
184T	100
213T	150
215T	170
254T	260
256T	290
284T	390
286T	440

ALL DIMENSIONS SHOWN IN INCHES

																									MOTOR BASE			
FAN SIZE	A	B	C	D	E	F	G	H	J	K	L	M	N	P	Q	R	S	T	U	V	W	X	Y	MIN. Z	MAX. Z	STD. FRAME SIZES RANGE	H.D. FRAME SIZES RANGE
122	20⅞	23	10⅞	10	9⅜	13⅝	5½	7/16	3½	11	5¾	6 9/16	17 9/16	13⅜	12 3/16	9¾	⅛	13	15/16	13 13/16	5 31/32	4 9/16	4⅝	3¾	5¾	48-213T	182T-256T
135	22 15/16	25 3/16	11 15/16	11	10 5/16	14⅞	5½	7/16	3½	11 15/32	6 7/32	7 1/32	18½	14⅜	13 7/16	10 11/16	5/32	3 15/16	31/32	15 1/16	6 9/16	5 1/16	5	3¾	5¾	48-213T	182T-256T
150	25¼	27 13/16	13¼	12	11 7/16	16⅜	5½	7/16	3½	12 3/32	6 27/32	7 21/32	19¾	16½	15	11 15/16	7/32	15 3/16	1 1/32	16⅝	7 9/32	5⅝	5½	3¾	5¾	48-213T	182T-256T
165	27 9/16	30⅜	14 9/16	13	12 9/16	17 13/16	6½	9/16	4	13 3/16	7 7/16	8¼	21 7/16	17½	16⅜	13⅛	7/32	16⅜	1 3/32	18⅛	7 31/32	6⅛	6	3¾	5¾	56-215T	143T-286T
182	30 1/16	33⅜	16 1/16	14	13 13/16	19 9/16	6½	9/16	4	13⅞	8⅛	9	22⅞	19½	18⅛	14½	7/32	17¾	1 3/32	19⅞	8 27/32	6⅝	6⅝	3¾	5¾	56-215T	143T-286T
200	32 9/16	36⅜	17 9/16	15	15⅛	21¼	6½	9/16	4	14 9/16	8 13/16	9 11/16	24¼	21½	19⅞	15⅞	¼	19⅛	1⅛	21⅝	9 11/16	7⅛	7¼	3¾	5¾	56-215T	143T-286T

	CLASS 1 & 2				CLASS 3*					
FAN SIZE	SHAFT DIA.	KEYWAY	WITH STD. MOTOR BASE	WITH H.D. MOTOR BASE	SHAFT DIA. BETWEEN BRGS.	KEYWAY	SHAFT DIA. BETWEEN BRGS.	KEYWAY	WITH STD. MOTOR BASE	WITH H.D. MOTOR BASE
122	1 3/16	¼ x ⅛	105	110	1 7/16	⅜ x 3/16	1 7/16	⅜ x 3/16	119	124
135	1 3/16	¼ x ⅛	119	124	1 7/16	⅜ x 3/16	1 7/16	⅜ x 3/16	133	138
150	1 3/16	¼ x ⅛	141	146	1 7/16	⅜ x 3/16	1 7/16	⅜ x 3/16	159	164
165	1 7/16	⅜ x 3/16	204	218	1 11/16	⅜ x 3/16	1 11/16	⅜ x 3/16	228	242
182	1 7/16	⅜ x 3/16	236	250	1 11/16	⅜ x 3/16	1 11/16	⅜ x 3/16	262	276
200	1 7/16	⅜ x 3/16	272	286	1 11/16	⅜ x 3/16	1 7/16	⅜ x 3/16	300	314

*Note: Sizes 200 has a turned down shaft thru bearings

QBCA/QBCS-222-330
ARRANGEMENT 3T SWSI

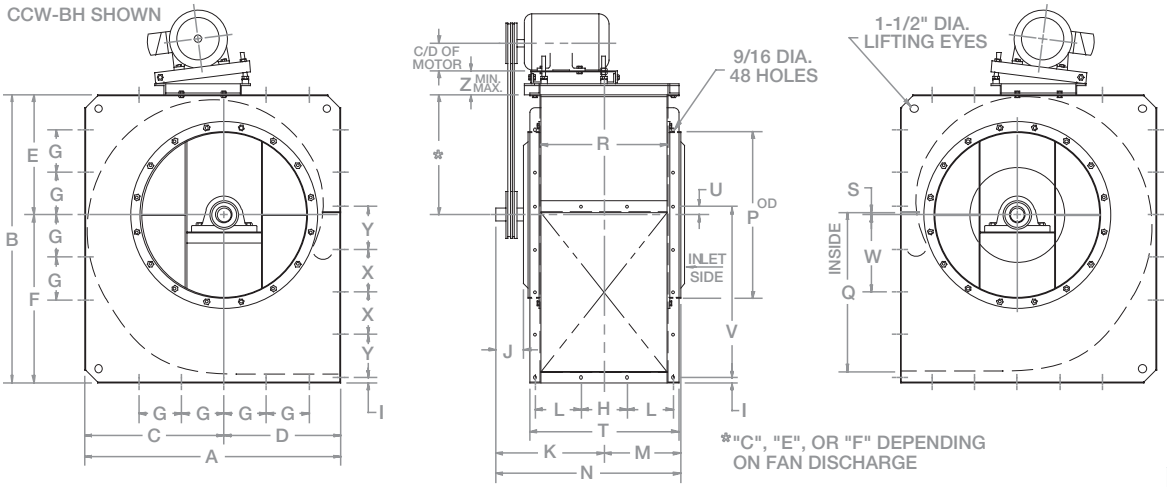

APPROX. MOTOR WEIGHT	
FRAME SIZE	WEIGHT LBS.
143T	45
145T	52
182T	85
184T	100
213T	150
215T	170
254T	260
256T	290
284T	390
286T	440
324T	555
326T	620

FAN SIZE	A	B	C	D	E	F	G	H	I	J	K	L	M	N	P	Q	R	S	T	U	V	W	X	Y	MOTOR BASE MIN. Z	MOTOR BASE MAX. Z	MOTOR BASE STD. FRAME SIZES RANGE	MOTOR BASE H.D. FRAME SIZES RANGE
222	35½	40 5/16	19½	16	16 13/16	23½	6½	6 7/16	¾	5	16 15/32	6½	10 19/32	27 1/16	23½	22⅛	17 11/16	9/32	20 15/16	1 5/32	23⅞	10 25/32	6	5 15/16	4¼	6¼	182T-256T	143T-286T
245	39½	44¾	21½	18	18½	26¼	6½	7 3/16	1	5	17 27/32	7¼	11 31/32	29 13/16	26½	24 7/16	19 7/16	11/32	23 11/16	1 15/32	26 11/16	11⅞	6 23/32	6⅝	4¼	6¼	182T-256T	143T-326T
270	43⅛	49 1/16	23⅝	19½	20⅜	28 11/16	6½	7 15/16	1	6	19 27/32	7⅞	12 31/32	32 13/16	28½	26 15/16	21 7/16	13/32	25 11/16	1 17/32	29 3/16	13 1/16	7 11/32	7¼	4¼	6¼	182T-256T	143T-326T
300	48¼	54¼	26¼	22	22⅝	31⅝	8	8 11/16	1	6	21 1/32	8 11/16	14 5/32	35 3/16	31½	29 15/16	23 13/16	7/16	28 1/16	1 9/16	32 3/16	14 17/32	7 31/32	8⅛	4¼	6¼	143T-286T	143T-326T
330	52 13/16	59⅜	28 13/16	24	24 13/16	34 9/16	8	9 7/16	1	6½	22 23/32	9½	15 11/32	38 1/16	34½	33	26 3/16	17/32	30 7/16	1 21/32	35¼	15 31/32	8 13/16	8 13/16	4¼	6¼	143T-286T	143T-326T

ALL DIMENSIONS SHOWN IN INCHES

FAN SIZE	CLASS 1 & 2 SHAFT DIA.	CLASS 1 & 2 KEYWAY	CLASS 1 & 2 WITH STD. MOTOR BASE	CLASS 1 & 2 WITH H.D. MOTOR BASE	CLASS 3* SHAFT DIA. BETWEEN BRGS.	CLASS 3* KEYWAY	CLASS 3* SHAFT DIA. BETWEEN BRGS.	CLASS 3* KEYWAY	CLASS 3* WITH STD. MOTOR BASE	CLASS 3* WITH H.D. MOTOR BASE
222	1 11/16	⅜ x 3/16	373	383	1 15/16	½ x ¼	1 11/16	⅜ x 3/16	409	419
245	1 11/16	⅜ x 3/16	453	469	1 15/16	½ x ¼	1 11/16	⅜ x 3/16	497	513
270	1 11/16	⅜ x 3/16	497	513	1 15/16	½ x ¼	1 11/16	⅜ x 3/16	571	587
300	1 15/16	½ x ¼	685	691	2 3/16	½ x ¼	1 15/16	½ x ¼	757	763
330	1 15/16	½ x ¼	803	810	2 3/16	½ x ¼	2 3/16	½ x ¼	947	954

*Note: Sizes 222 thru 300 have a turned down shaft thru bearings

QBCA/QBCS-365-445
ARRANGEMENT 3T SWSI

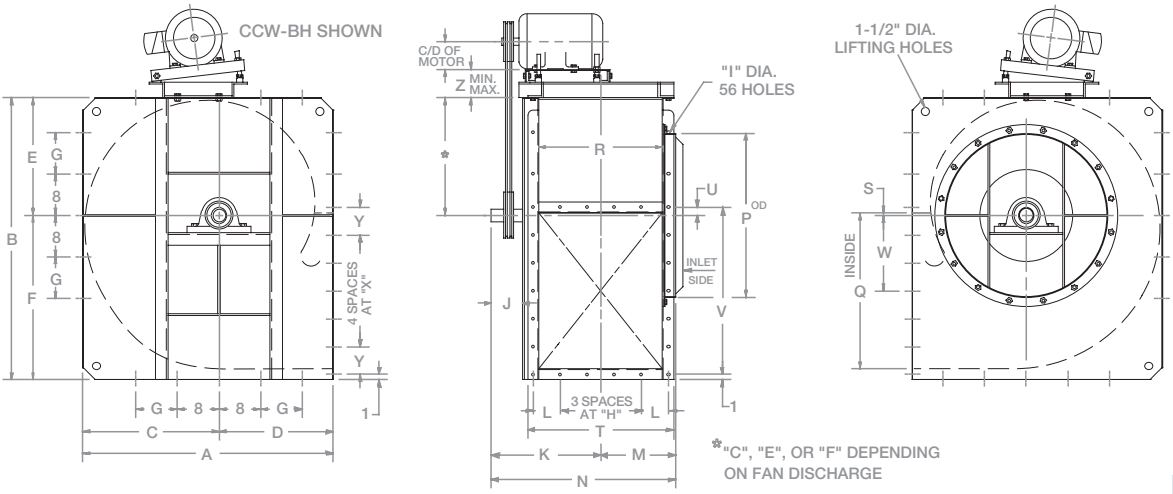

APPROX. MOTOR WEIGHT	
FRAME SIZE	WEIGHT LBS.
143T	45
145T	52
182T	85
184T	100
213T	150
215T	170
254T	260
256T	290
284T	390
286T	440
324T	555
326T	620

FAN SIZE	A	B	C	D	E	F	G	H	I	J	K	L	M	N	P	Q	R	S	T	U	V	W	X	Y	MOTOR BASE MIN. Z	MOTOR BASE MAX. Z	MOTOR BASE STD. FRAME SIZES RANGE	MOTOR BASE H.D. FRAME SIZES RANGE
365	58⅞	65½	31⅞	27	27 7/16	38 1/16	8	6¼	1 1/16	6½	24 3/16	6¼	16 13/16	41	37½	36½	29	13/16	33¼	1 11/16	38¾	17 11/16	6½	6⅜	5¼	7	143T-286T	143T-326T
402	65⅛	72	35⅛	30	30¼	41¾	16	6 13/16	1 1/16	7	26 3/16	6⅞	18 9/32	44 15/32	41½	40 5/16	31 15/16	15/16	36 3/16	1 13/16	42 9/16	19 15/32	7 3/32	7 3/32	5¼	7	143T-286T	143T-326T
445	71 13/16	79 7/16	38 13/16	33	33 7/16	46	16	7½	1 1/16	7	27⅞	7 17/32	19 31/32	47 27/32	45½	44 9/16	35 5/16	31/32	39 9/16	1 27/32	46 13/16	21 9/16	7 13/16	7 25/32	5¼	7	143T-286T	143T-326T

ALL DIMENSIONS SHOWN IN INCHES

FAN SIZE	CLASS 1 & 2 SHAFT DIA.	CLASS 1 & 2 KEYWAY	CLASS 1 & 2 WITH STD. MOTOR BASE	CLASS 1 & 2 WITH H.D. MOTOR BASE	CLASS 3 SHAFT DIA.	CLASS 3 KEYWAY	CLASS 3 WITH STD. MOTOR BASE	CLASS 3 WITH H.D. MOTOR BASE
365	2 3/16	½ x ¼	1254	1261	2 7/16	⅝ x 5/16	1476	1483
402	2 3/16	½ x ¼	1533	1539	2 7/16	⅝ x 5/16	1771	1777
445	2 7/16	⅝ x 5/16	1769	1776	2 11/16	⅝ x 5/16	1977	1984

NOTES:
BELT C/D = "N" DIM.
ARR'T 3R UNITARY BASE MOTOR POSITION "W"
CHANNEL: 4 X 2 X .1793
ARR'T 3W SHOWN, ARR'T 3Z IS MIRROR IMAGE.

QBCS-122-150
ARRANGEMENT 3 SWSI UNITARY

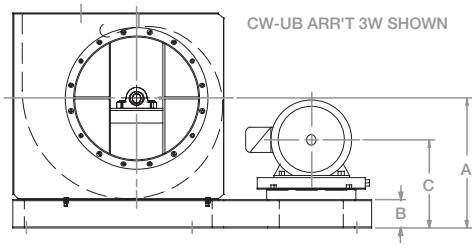

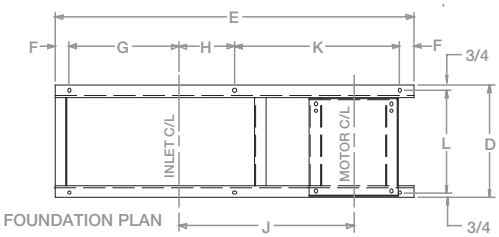

FOUNDATION PLAN

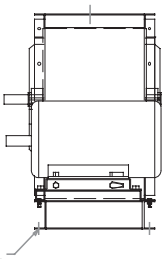

ALL DIMENSIONS SHOWN IN INCHES

		CW-UB CCW-UB	CW-UB CCW-TH	CW-BH						CW-UB			CCW-UB			CW-BH CCW-TH						CW-UB	CCW-UB	CCW-TH	CW-BH	APPROX. WT. FAN, MTR, UNIT	
FAN SIZE	FRAME SIZE	A	A	A	B	C	D	E	F	G	H	J	G	H	J	G	H	J	K	L	M	N	N	N	N	CLASS 1 & 2	CLASS 3
122	143T	14⅞	13⅜	17⅝	4	10¼	13	38	3	10⅝	5⅜	18⅛	6⅜	9⅝	22⅜	7	9	21¾	16	11½	9/16	18.7	22.8	22.0	23.0	162	220
	145T																									216	230
	182T					11⅝		40			6⅜	19		10⅝	23¼		10	22⅝	17			19.3	23.5	22.7	23.4	260	272
	184T																									272	286
	213T					12⅝		44			8⅜	21⅞		12⅝	26⅛		12	25½	19			22.0	26.2	25.5	26.0	333	347
	215T																									353	367
	254T					14⁷⁄₁₆		47			9⅞	23½		14⅛	27¾		13½	27⅛	20½			23.5	27.8	27.1	27.3	460	474
	256T																									490	504
135	143T	15¹⁵⁄₁₆	14⁵⁄₁₆	18⅞	4	10¼	13¹⁵⁄₁₆	40	3	11⅞	5⅛	18⅞	7⁵⁄₁₆	9¹¹⁄₁₆	22⁷⁄₁₆	8	9	22¾	17	12⁷⁄₁₆	9/16	19.7	23.1	23.1	24.3	222	236
	145T																									232	246
	182T					11⅝		42			6⅛	19¾		10¹¹⁄₁₆	24⁵⁄₁₆		10	23⅝	18			20.2	24.7	23.8	24.7	273	287
	184T																									288	302
	213T					12⅝		46			8⅛	22⅝		12¹¹⁄₁₆	27³⁄₁₆		12	26½	20			22.9	27.4	26.6	27.2	349	363
	215T																									369	383
	254T					14⁷⁄₁₆		49			9⅝	24¼		14³⁄₁₆	28¹³⁄₁₆		13½	28⅛	21½			24.3	28.9	28.1	28.5	476	490
	256T																									506	520
150	143T	17¼	15⁷⁄₁₆	20⅜	4	10¼	15³⁄₁₆	43	3	13⅜	5⅛	20⅜	8⁷⁄₁₆	10¹⁄₁₆	25⁵⁄₁₆	9	9½	24¾	18½	13¹¹⁄₁₆	9/16	21.5	26.3	25.3	26.7	248	266
	145T																									258	276
	182T					11⅝		45			6⅛	21¼		11¹⁄₁₆	26³⁄₁₆		10½	25⅝	19½			22.0	26.8	25.9	27.1	299	317
	184T																									314	332
	213T					12⅝		49			8⅛	24⅛		13¹⁄₁₆	29¹⁄₁₆		12½	28½	21½			24.6	29.4	28.6	29.5	375	393
	215T																									395	413
	254T					14⁷⁄₁₆		52			9⅝	25¾		14⁹⁄₁₆	30¹¹⁄₁₆		14	30⅛	23			25.9	30.8	30.1	30.7	502	520
	256T																									532	550
	284T					15³⁄₁₆		55			11⅛	27¼		16¹⁄₁₆	32³⁄₁₆		15½	31⅝	24½			27.3	32.2	31.6	32.0	645	663
	286T																									695	713

NOTES:
BELT C/D = "N" DIM.
ARR'T 3R UNITARY BASE MOTOR POSITION "W"
CHANNEL: 4 X 2 X .1793
ARR'T 3W SHOWN, ARR'T 3Z IS MIRROR IMAGE.

QBCA/QBCS-165-200
ARRANGEMENT 3 SWSI UNITARY

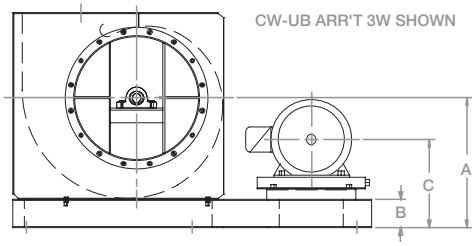

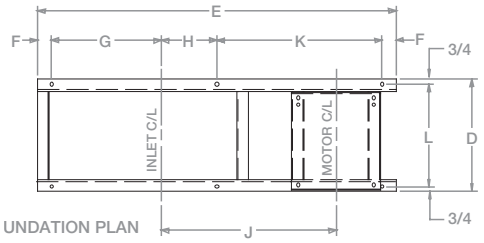

UNDATION PLAN

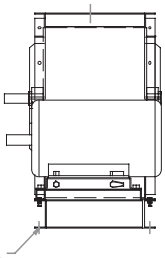

ALL DIMENSIONS SHOWN IN INCHES

		CW-UB CCW-UB	CW-UB CCW-TH	CW-BH						CW-UB			CCW-UB			CW-BH CCW-TH						CW-UB	CCW-UB	CCW-TH	CW-BH	APPROX. WT. FAN, MTR, UNIT	
FAN SIZE	FRAME SIZE	A	A	A	B	C	D	E	F	G	H	J	G	H	J	G	H	J	K	L	M	N	N	N	N	CLASS 1 & 2	CLASS 3
165	182T	18⁹⁄₁₆	16⁹⁄₁₆	21¹³⁄₁₆	4	11⅝	16⅜	48	3	14¹³⁄₁₆	6³⁄₁₆	22¹³⁄₁₆	9⁹⁄₁₆	11⁷⁄₁₆	28¹⁄₁₆	10	11	27⅝	21	14⅞	11/16	23.8	28.9	28.1	29.4	365	393
	184T																									380	408
	213T					12⅝		52			8³⁄₁₆	25¹¹⁄₁₆		13⁷⁄₁₆	30¹⁵⁄₁₆		13	30½	23			26.4	31.5	30.8	31.9	443	471
	215T																									463	491
	254T					14⁷⁄₁₆		55			9¹¹⁄₁₆	27⁵⁄₁₆		14¹⁵⁄₁₆	32⁹⁄₁₆		14½	32⅛	24½			27.6	32.8	32.2	33.0	568	596
	256T																									598	626
	284T					15³⁄₁₆		58			11³⁄₁₆	28¹³⁄₁₆		16⁷⁄₁₆	34¹⁄₁₆		16	33⅝	26			29.0	34.2	33.7	34.3	711	739
	286T																									761	789
182	182T	20¹⁄₁₆	17¹³⁄₁₆	23⁹⁄₁₆	4	11⅝	17¾	51	3	16⁹⁄₁₆	5¹⁵⁄₁₆	24¹⁄₁₆	10¹³⁄₁₆	11¹¹⁄₁₆	29¹³⁄₁₆	11	11½	29⅝	22½	16¼	11/16	25.5	31.0	30.3	31.9	403	433
	184T																									418	448
	213T					12⅝		55			7¹⁵⁄₁₆	26¹⁵⁄₁₆		13¹¹⁄₁₆	32¹¹⁄₁₆		13½	32½	24½			27.9	33.5	32.9	34.3	483	513
	215T																									503	533
	254T					14⁷⁄₁₆		58			9⁷⁄₁₆	28⁹⁄₁₆		15³⁄₁₆	34⁵⁄₁₆		15	34⅛	26			29.1	34.8	34.3	35.3	610	640
	256T																									640	670
	284T					15³⁄₁₆		61			10¹⁵⁄₁₆	30¹⁄₁₆		16¹¹⁄₁₆	35¹³⁄₁₆		16½	35⅝	27½			30.5	36.1	35.7	36.6	753	783
	286T																									803	833
200	182T	21⁹⁄₁₆	19⅛	25¼	4	11⅝	19⅛	54	3	18¼	5¾	25⅜	12⅛	11⅞	31½	12	12	31⅝	24	17⅝	11/16	27.3	33.0	32.5	34.4	447	475
	184T																									462	490
	213T					12⅝		58			7¾	28¼		13⅞	34⅜		14	34½	26			29.6	35.5	35.1	36.7	527	555
	215T																									547	575
	254T					14⁷⁄₁₆		61			9¼	29⅞		15⅜	36		15½	36⅛	27½			30.7	36.7	36.4	37.7	656	684
	256T																									686	714
	284T					15³⁄₁₆		64			10¾	31⅜		16⅞	37½		17	37⅝	29			32.0	38.0	37.8	38.9	797	825
	286T																									847	875
	324T					16¹¹⁄₁₆		68			12¾	33⅞		18⅞	40		19	40⅛	31			34.2	40.3	40.2	41.0	980	1008
	326T																									1045	1073

QBCA/QBCS-222-270
ARRANGEMENT 3 SWSI
UNITARY

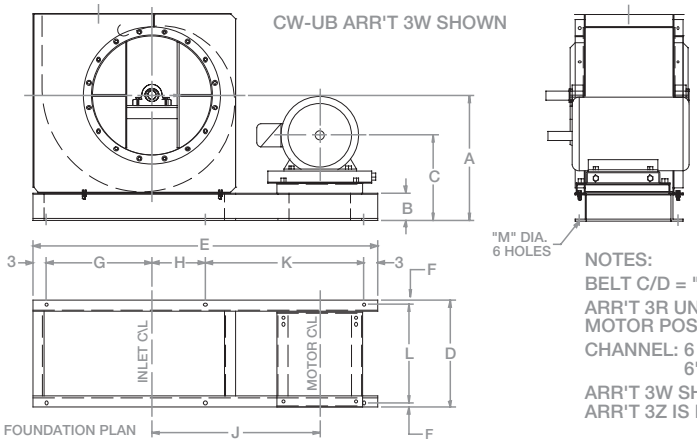

NOTES:
BELT C/D = "N" DIM.
ARR'T 3R UNITARY BASE
MOTOR POSITION "W"
CHANNEL: 6 X 2.497 X .310
6"-12#
ARR'T 3W SHOWN,
ARR'T 3Z IS MIRROR IMAGE.

ALL DIMENSIONS SHOWN IN INCHES

		CW-UB CCW-UB	CW-TH CCW-TH	CW-BH						CW-UB			CCW-UB			CW-TH			CW-BH CCW-TH						CW-UB	CCW-UB	CW-TH	CCW-TH	CW-BH	APPROX. WT. FAN, MTR, UNIT	
FAN SIZE	FRAME SIZE	A	A	A	B	C	D	E	F	G	H	J	G	H	J	G	H	J	G	H	J	K	L	M	N	N	N	N	N	CLASS 1 & 2	CLASS 3
222	182T	25½	22 13/16	29½	6	13⅝	20 15/16	58	¾	20½	5½	27⅛	13 13/16	12 3/16	33 13/16	16½	9½	31⅛	13	13	34⅝	26	19 7/16	¾	29.6	35.5	32.5	35.8	38.1	640	676
	184T																													655	691
	213T					14⅝		62			7½	30		14 3/16	36 11/16		11½	34		15	37½	28			31.9	38.3	35.0	38.4	40.3	722	758
	215T																													742	778
	254T					16 7/16		65			9	31⅝		15 11/16	38 5/16		N/A	N/A		16½	39⅛	29½			32.9	39.4	N/A	40.0	41.2	854	890
	256T																													884	920
	284T					17 3/16		68			10½	33⅛		17 3/16	39 13/16		N/A	N/A		18	40⅝	31			34.2	40.7	N/A	41.0	42.4	999	1035
	286T																													1049	1085
	324T					18 11/16		72			12½	35⅝		19 3/16	42 5/16		N/A	N/A		20	43⅛	33			36.3	42.9	N/A	43.3	44.5	1187	1223
	326T																													1252	1288
	364T					19¾		75			14	37¼		20 11/16	43 15/16		N/A	N/A		21½	44¾	34½			37.7	44.3	N/A	44.9	45.8	1416	1452
	365T																													1476	1512
245	182T	27½	24½	32¼	6	13⅝	23 11/16	62	1	23¼	4¾	28⅜	15½	12½	36⅛	18½	9½	33⅛	15	13	36⅝	28	21 11/16	¾	31.6	38.7	34.9	38.2	41.1	739	783
	184T																													754	798
	213T					14⅝		67			7¼	32¼		15	40		12	37		15½	40½	30½			34.7	42.0	38.2	41.6	44.2	822	866
	215T																													842	886
	254T					16 7/16		69			8¼	32⅞		16	40⅝		N/A	N/A		16½	41⅛	31½			34.7	42.1	N/A	41.9	44.1	953	997
	256T																													983	1027
	284T					17 3/16		72			9¾	34⅜		17½	42⅛		N/A	N/A		18	42⅝	33			35.9	43.4	N/A	43.2	45.2	1098	1142
	286T																													1148	1192
	324T					18 11/16		76			11¾	36⅞		19½	44⅝		N/A	N/A		20	45⅛	35			37.9	45.5	N/A	45.5	47.1	1286	1330
	326T																													1351	1395
	364T					19¾		79			13¼	38½		21	46¼		N/A	N/A		21½	46⅜	36½			39.3	46.9	N/A	47.0	48.4	1515	1559
	365T																													1575	1619
270	213T	29⅝	26⅜	34 11/16	6	14⅝	25 11/16	71	1	25 11/16	6 13/16	33 13/16	17⅜	15⅛	42⅛	20⅝	11⅞	38⅞	16½	16	43	32½	23 11/16	⅞	37.0	44.7	40.6	44.6	47.5	882	956
	215T																													902	976
	254T					16 7/16		74			8 5/16	35 7/16		16⅝	43¾		13⅜	40½		17½	44⅝	34			37.8	45.7	41.7	45.7	48.2	1015	1089
	256T																													1045	1119
	284T					17 3/16		77			9 13/16	36 15/16		18⅛	45¼		14⅞	42		19	46⅛	35½			39.0	46.9	43.0	47.0	49.3	1160	1253
	286T																													1210	1284
	324T					18 11/16		81			11 13/16	39 7/16		20⅛	47¾		N/A	N/A		21	48⅝	37½			40.9	49.0	N/A	49.2	51.2	1348	1422
	326T																													1413	1487
	364T					19¾		84			13 5/16	41 1/16		21⅝	49⅜		N/A	N/A		22½	50¼	39			42.2	50.4	N/A	50.7	52.4	1577	1651
	365T																													1637	1711

QBCA/QBCS-300 & 330
ARRANGEMENT 3 SWSI
UNITARY

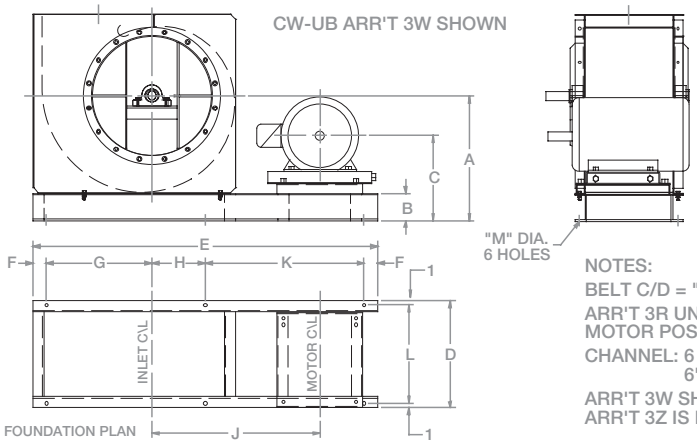

NOTES:
BELT C/D = "N" DIM.
ARR'T 3R UNITARY BASE
MOTOR POSITION "W"
CHANNEL: 6 X 2.497 X .310
6"-12#
ARR'T 3W SHOWN,
ARR'T 3Z IS MIRROR IMAGE.

ALL DIMENSIONS SHOWN IN INCHES

		CW-UB CCW-UB	CW-TH CCW-TH	CW-BH						CW-UB			CCW-UB			CW-TH			CW-BH CCW-TH						CW-UB	CCW-UB	CW-TH	CCW-TH	CW-BH	APPROX. WT. FAN, MTR, UNIT	
FAN SIZE	FRAME SIZE	A	A	A	B	C	D	E	F	G	H	J	G	H	J	G	H	J	G	H	J	K	L	M	N	N	N	N	N	CLASS 1 & 2	CLASS 3
300	213T	32¼	28⅝	37⅝	6	14⅝	28 1/16	76	3	28⅝	6⅜	35⅞	19⅝	15⅜	44⅞	23¼	11¾	41¼	19	16	45½	35	26 1/16	⅞	40.0	48.2	43.6	47.6	50.2	1080	1152
	215T																													1100	1172
	254T					16 7/16		79			7⅞	37½		16⅞	46½		13¼	42⅞		17½	47⅛	36½			40.7	49.1	44.6	48.7	51.7	1213	1285
	256T																													1243	1315
	284T					17 3/16		82			9⅜	39		18⅜	48		14¾	44⅜		19	48⅝	38			41.8	50.3	45.8	50.0	52.7	1357	1429
	286T																													1407	1479
	324T					18 11/16		86			11⅜	41½		20⅜	50½		N/A	N/A		21	51⅛	40			43.7	52.3	N/A	52.1	54.5	1546	1618
	326T																													1611	1683
	364T					19¾		89			12⅞	43⅛		21⅞	52⅛		N/A	N/A		22½	52¾	41½			44.9	53.6	N/A	53.5	55.7	1775	1847
	365T																													1835	1907
	404T					22¼		94			15⅜	46		24⅜	55		N/A	N/A		25	55⅝	44			47.1	55.9	N/A	56.0	57.7	2134	2206
	405T																													2234	2306
330	254T	34 13/16	30 13/16	40 9/16	6	16 7/16	30 7/16	84	3	31 9/16	7 7/16	39 9/16	21 13/16	17 3/16	49 5/16	25 13/16	13 3/16	45 5/16	21	18	50⅛	39	28 7/16	⅞	43.6	52.6	47.5	52.1	55.6	1350	1494
	256T																													1380	1524
	284T					17 3/16		87			8 15/16	41 1/16		18 11/16	50 13/16		14 11/16	46 13/16		19½	51⅝	40½			44.7	53.8	48.8	53.4	56.7	1495	1639
	286T																													1545	1689
	324T					18 11/16		91			10 15/16	43 9/16		20 11/16	53 5/16		16 11/16	49 5/16		21½	54⅛	42½			46.5	55.7	50.8	55.5	58.4	1683	1827
	326T																													1748	1892
	364T					19¾		94			12 7/16	45 3/16		22 3/16	54 15/16		N/A	N/A		23	55¾	44			47.6	57.0	N/A	56.8	59.5	1912	2056
	365T																													1972	2116
	404T					22¼		99			14 15/16	48 1/16		24 11/16	57 13/16		N/A	N/A		25½	58⅝	46½			49.7	59.2	N/A	59.2	61.4	2272	2416
	405T																													2372	2516

QBCA / QBCS-365 & 402
ARRANGEMENT 3 SWSI UNITARY

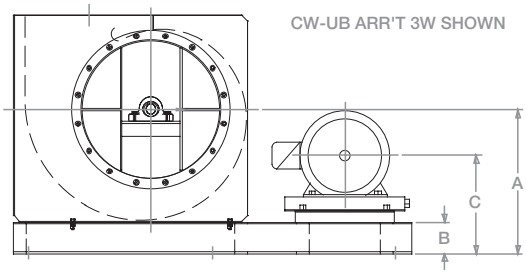

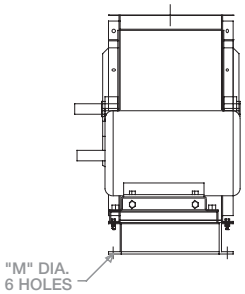

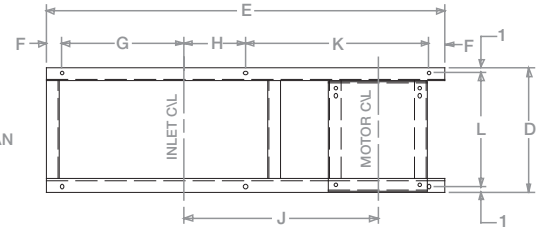

FOUNDATION PLAN

NOTES:
BELT C\D = "N" DIM.
ARR'T 3R UNITARY BASE
MOTOR POSITION "W"
CHANNEL: 6 X 2.497 X .310
6" - 12"
ARR'T 3W SHOWN,
ARR'T 3Z IS MIRROR IMAGE.

ALL DIMENSIONS SHOWN IN INCHES

		CW-UB CCW-UB	CW-TH CCW-TH	CW-BH						CW-UB			CCW-UB			CW-TH			CW-BH CCW-TH						CW-UB	CCW-UB	CW-TH	CCW-TH	CW-BH	APPROX. WT. FAN, MTR, UNIT	
FAN SIZE	FRAME SIZE	A	A	A	B	C	D	E	F	G	H	J	G	H	J	G	H	J	G	H	J	K	L	M	N	N	N	N	N	CLASS 1 & 2	CLASS 3
365	254T	37⅞	33 7/16	44 1/16	6	16 7/16	33¼	90	3	35 1/16	6 15/16	42 1/16	24 7/16	17 9/16	52 11/16	28⅞	13⅛	48¼	24	18	53⅛	42	31¼	⅞	47.2	56.9	51.2	55.8	59.9	1673	1751
	256T																													1703	1781
	284T					17 3/16		93			8 7/16	43 9/16		19 1/16	54 3/16		14⅝	49¾		19½	54⅝	43½			48.2	58.0	52.3	57.0	60.9	1842	1896
	286T																													1868	1946
	324T					18 11/16		97			10 7/16	46 1/16		21 1/16	56 11/16		16⅝	52¼		21½	57⅛	45½			50.0	59.8	54.3	59.0	62.5	2006	2084
	326T																													2071	2149
	364T					19¾		100			11 15/16	47 11/16		22 9/16	58 9/16		18⅛	53⅞		23	58¾	47			51.0	61.1	55.6	60.3	63.6	2235	2313
	365T																													2295	2373
	404T					22¼		105			14 7/16	50 9/16		25 1/16	61 3/16		N/A	N/A		25½	61⅝	49½			52.9	63.2	N/A	62.6	65.4	2595	2673
	405T																													2695	2773
	444T					23¼		110			16 15/16	54 5/16		27 9/16	64 15/16		N/A	N/A		28	65⅜	52			56.2	66.6	N/A	66.2	68.6	2990	3068
	445T																													3165	3243
402	254T	41⅛	36¼	47¾	6	16 7/16	36 3/16	96	3	38¾	6¼	44⅜	27¼	17¾	55⅞	32⅛	12⅞	51	27	18	56⅛	45	34 3/16	⅞	50.8	61.1	54.7	59.5	64.3	1927	2083
	256T																													1957	2113
	284T					17 3/16		99			7¾	45⅞		19¼	57⅜		14⅜	52½		19½	57⅝	46½			51.7	62.2	55.9	60.7	65.6	2072	2228
	286T																													2122	2278
	324T					18 11/16		103			9¾	48⅜		21¼	59⅞		16⅜	55		21½	60⅛	48½			53.3	63.9	57.7	62.6	66.8	2260	2416
	326T																													2325	2481
	364T					19¾		106			11¼	50		22¾	61½		17⅞	56⅝		23	61¾	50			54.4	65.1	59.0	63.9	67.8	2489	2645
	365T																													2549	2705
	404T					22¼		111			13¾	52⅞		25¼	64⅜		20⅜	59½		25½	64⅝	52½			56.1	67.1	61.1	66.1	69.5	2849	3005
	405T																													2949	3105
	444T					23¼		116			16¼	56⅝		27¾	68⅛		N/A	N/A		28	68⅜	55			59.4	70.4	N/A	69.6	72.6	3244	3400
	445T																													3419	3575

QBCA/QBCS-445
ARRANGEMENT 3 SWSI UNITARY

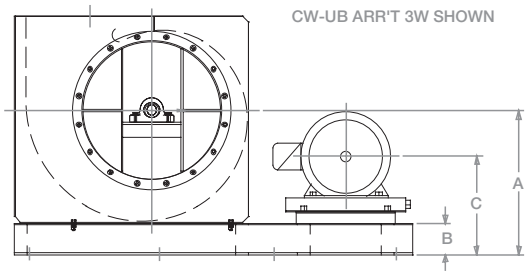

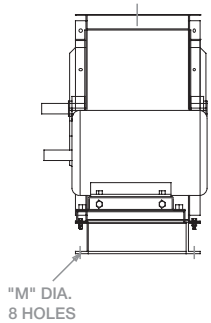

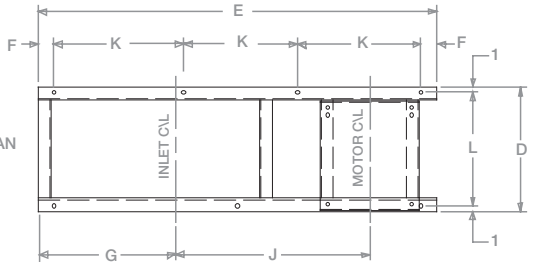

FOUNDATION PLAN

NOTES:
BELT C\D = "N" DIM.
ARR'T 3R UNITARY BASE
MOTOR POSITION "W"
CHANNEL: 8 X 2.978 X .353
8" - 18.7"
ARR'T 3W SHOWN,
ARR'T 3Z IS MIRROR IMAGE.

ALL DIMENSIONS SHOWN IN INCHES

		CW-UB CCW-UB	CW-TH CCW-TH	CW-BH						CW-UB		CCW-UB		CW-TH		CW-BH CCW-TH									CW-UB	CCW-UB	CW-TH	CCW-TH	CW-BH	APPROX. WT. FAN, MTR, UNIT	
FAN SIZE	FRAME SIZE	A	A	A	B	C	D	E	F	G	J	G	J	G	J	G	J	K	L	M	N	N	N	N	N	CLASS 1 & 2	CLASS 3
445	324T	46 13/16	41 7/16	54	8	20 11/16	39 9/16	112	5	46	53⅛	33 7/16	65 11/16	38 13/16	60 5/16	33	66⅛	34	37 9/16	⅞	59.2	70.7	63.8	69.3	74.0	2742	2928
	326T																									2807	2993
	364T					21¾		115			54¾		67 5/16		61 15/16		67¾	35			60.2	71.8	65.0	70.6	75.0	2975	3161
	365T																									3035	3221
	404T					24¼		121			58⅝		71 3/16		65 13/16		71⅝	37			62.8	74.7	68.0	73.7	77.6	3343	3529
	405T																									3443	3629
	444T					25¼		124			60⅜		72 15/16		67 9/16		73⅜	38			64.1	76.1	69.5	75.1	78.8	3738	3924
	445T																									3913	4099
	447T					25 5/16		124			60⅜		72 15/16		67 9/16		73⅜	38			64.1	76.0	69.5	75.1	78.8	4476	4662

BCA/BCS-122-200 & QBCA/QBCS-122-200 FLANGES

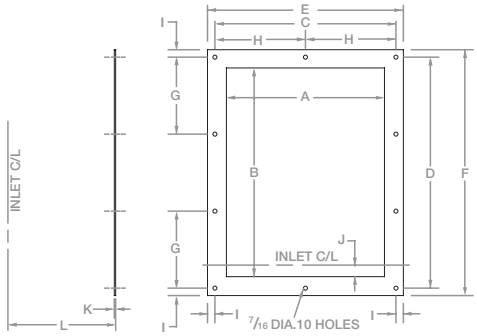

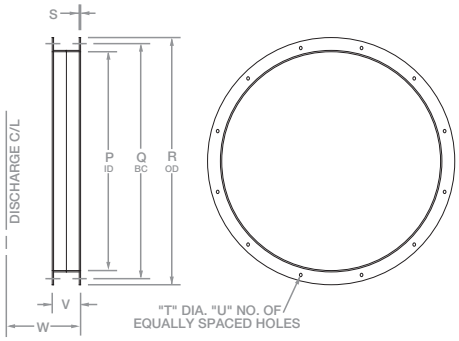

OUTLET FLANGE													
SIZE	PART NO.	A	B	C	D	E	F	G	H	I	J	K	L
122	51152	10	12 5/16	11 1/2	13 13/16	13	15 5/16	4 5/8	5 3/4	3/4	3/16	3/16	10
135	51153	10 5/16	13 9/16	12 7/16	15 1/16	13 15/16	16 9/16	5	6 7/32	3/4	7/32	3/16	11
150	51154	12 3/16	15 1/8	13 11/16	16 5/8	15 3/16	18 1/8	5 1/2	6 27/32	3/4	9/32	3/16	12
165	51155	13 3/8	16 5/8	14 7/8	18 1/8	16 3/8	19 5/8	6	7 7/16	3/4	11/32	1/4	13
182	51156	14 3/4	18 3/8	16 1/4	19 7/8	17 3/4	21 3/8	6 5/8	8 1/8	3/4	11/32	1/4	14
200	51157	16 1/8	20 1/8	17 5/8	21 5/8	19 1/8	23 1/8	7 1/4	8 13/16	3/4	3/8	1/4	15

INLET FLANGE									
SIZE	WELDMENT PART NO.	P	Q	R	S	T	U	V	W
122	50176	13 1/8	15	16 1/8	1/8	9/16	8	3	8 1/16
135	50177	14 1/8	16	17 1/8	1/8	9/16	8	3	8 17/32
150	50178	16 1/8	18	19 1/8	3/16	9/16	8	3	9 5/32
165	50179	17 1/8	19	20 1/8	3/16	9/16	8	3	9 3/4
182	50180	19 1/8	20 3/4	22 1/8	3/16	9/16	12	3	10 1/2
200	50181	21 1/8	22 3/4	24 1/2	3/16	9/16	12	3	11 3/16

BCA/BCS-222-330 & QBCA/QBCS-222-330 FLANGES

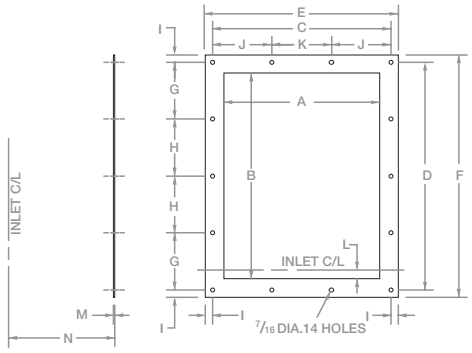

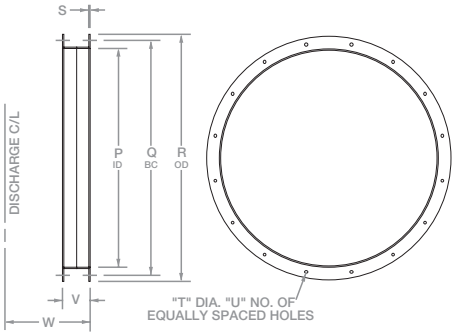

OUTLET FLANGE																	
SIZE	PART NO.	A	B	C	D	E	F	G	H	I	J	K	L	M	N	TAU BAU N	TAD N
222	51158	17 15/16	22 3/8	31 1/4	23 7/8	20 15/16	25 3/8	5 15/16	6	3/4	6 1/2	6 7/16	13/16	1/4	16	20 1/2	23 3/4
245	51159	19 11/16	24 11/16	21 11/16	26 11/16	23 11/16	28 11/16	6 5/8	6 23/32	1	7 1/4	7 3/16	15/32	1/4	18	22 1/2	26 3/4
270	51160	21 11/16	27 3/16	23 11/16	29 3/16	25 11/16	31 3/16	7 1/4	7 11/32	1	7 7/8	7 15/16	17/32	1/4	19 1/2	24	28 1/4
300	51161	24 1/16	30 3/16	26 1/16	32 3/16	28 1/16	34 3/16	8 1/8	7 31/32	1	8 11/32	8 11/16	9/16	1/4	22	26	30 1/2
330	51162	26 7/16	33 1/4	28 7/16	35 1/4	30 7/16	37 1/4	8 13/16	8 13/16	1	9 1/2	9 7/16	21/32	1/4	24	28 3/4	33 3/4

INLET FLANGE									
SIZE	WELDMENT PART NO.	P	Q	R	S	T	U	V	W
222	50182	23 1/8	24 7/8	26 1/8	3/16	9/16	12	3	12 9/32
245	50183	26 1/8	28 3/8	30 1/8	3/16	9/16	16	4	14 5/32
270	50184	28 1/8	30 3/8	32 1/8	3/16	9/16	16	4	15 5/32
300	50185	31 1/8	33 3/8	35 1/8	3/16	9/16	16	4	16 11/32
330	50186	34 1/8	36 3/8	38 1/8	3/16	9/16	16	4	17 17/32

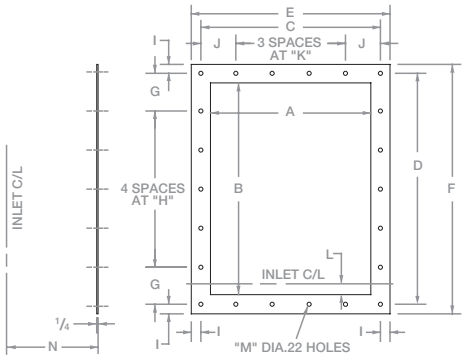

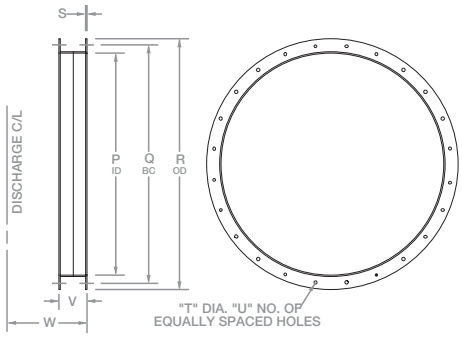

OUTLET FLANGE

SIZE	PART NO.	A	B	C	D	E	F	G	H	I	J	K	L	M	N	TAD N
365	51163	29¼	36¾	31¼	38¾	33¼	40¾	6⅜	6½	1	6¼	6¼	1 1/16	7/16	27	42 1/16
402	51164	32 3/16	40 9/16	34 9/16	42 9/16	36 3/16	44 9/16	7 3/32	7 3/32	1	6⅞	6 13/16	13/16	7/16	30	45¼
445	51165	35 9/16	44 13/16	37 9/16	46 13/16	39 9/16	48 13/16	7 25/32	7 13/16	1	7 17/32	7½	27/32	7/16	33	47⅞
490	51166	39⅛	49 5/16	42⅛	52 5/16	45⅛	55 5/16	8 21/32	8¾	1½	8 13/32	8 7/16	29/32	1 1/16	36	56 3/16
542	51167	43 5/16	54⅝	46 5/16	57⅝	49 5/16	60⅝	9 9/16	9⅝	1½	9 9/32	9¼	1 1/16	1 1/16	40	59⅞
600	51168	47⅞	60 7/16	51⅞	64 7/16	55⅞	68 7/16	10 23/32	10¾	2	10⅜	10⅜	1 3/16	1 1/16	44	70½
660	51169	52⅝	66½	56⅝	70½	60⅝	74½	11¾	11¾	2	11 7/16	11¼	1 5/16	1 1/16	49	74⅞

INLET FLANGE

SIZE	WELDMENT PART NO.	P	Q	R	S	T	U	V	W
365	50187	37⅛	39⅜	41⅛	3/16	9/16	16	4	18 13/16
402	50188	41⅛	43⅜	45⅛	3/16	9/16	24	4	20 9/32
445	50189	45⅛	47⅜	49⅛	3/16	9/16	24	4	21 31/32
490	50190	51	54½	57	¼	1 1/16	24	6	25¾
542	50191	56¼	59¾	62¼	¼	1 1/16	24	6	27 27/32
600	50192	63¾	67¼	69¾	⅜	1 1/16	32	6	30⅛
660	50193	69¾	73¼	75¾	⅜	1 1/16	32	6	32½

BPE INC.
BULK PROCESS EQUIPMENT
Distributed by:
Bulk Process Equipment, Inc.
763-444-8333
info@bpeinc.net
www.bpeinc.net

BPE INC.
BULK PROCESS EQUIPMENT

Distributed by:
Bulk Process
Equipment, Inc.

763-444-8333
info@bpeinc.net
www.bpeinc.net

Howden Industrial Fan Group
American Fan / Joy Fan / Garden City Fan

Factory / Office
2933 Symmes Road
Fairfield, Ohio 45014-2099

Tel: 1-866-771-6266
Fax: 1-513-870-6249
Email: haf.sales@howden.com

Revolving Around You™

©Howden Group Limited.
All rights reserved. 2016.

Howden and the flying H logo are registered trademarks belonging to Howden Group Limited.

05/2016
PRINTED IN U.S.A.